COGNEX

In-Sight® CIO-MICRO and CIO-MICRO-CC I/O Modules

Installation Manual

2020 January 03
Revision: 5.8.1.3

Legal Notices

The software described in this document is furnished under license, and may be used or copied only in accordance with the terms of such license and with the inclusion of the copyright notice shown on this page. Neither the software, this document, nor any copies thereof may be provided to, or otherwise made available to, anyone other than the licensee. Title to, and ownership of, this software remains with Cognex Corporation or its licensor. Cognex Corporation assumes no responsibility for the use or reliability of its software on equipment that is not supplied by Cognex Corporation. Cognex Corporation makes no warranties, either express or implied, regarding the described software, its merchantability, non-infringement or its fitness for any particular purpose.

The information in this document is subject to change without notice and should not be construed as a commitment by Cognex Corporation. Cognex Corporation is not responsible for any errors that may be present in either this document or the associated software.

Companies, names, and data used in examples herein are fictitious unless otherwise noted. No part of this document may be reproduced or transmitted in any form or by any means, electronic or mechanical, for any purpose, nor transferred to any other media or language without the written permission of Cognex Corporation.

Copyright © 2008 - 2020. Cognex Corporation. All Rights Reserved.

Portions of the hardware and software provided by Cognex may be covered by one or more U.S. and foreign patents, as well as pending U.S. and foreign patents listed on the Cognex web site at: cognex.com/patents.

The following are registered trademarks of Cognex Corporation:

Cognex, 2DMAX, Advantage, AlignPlus, Assemblyplus, Check it with Checker, Checker, Cognex Vision for Industry, Cognex VSOC, CVL, DataMan, DisplayInspect, DVT, EasyBuilder, Hotbars, IDMax, In-Sight, Laser Killer, MVS-8000, OmniView, PatFind, PatFlex, PatInspect, PatMax, PatQuick, SensorView, SmartView, SmartAdvisor, SmartLearn, UltraLight, Vision Solutions, VisionPro, VisionView

The following are trademarks of Cognex Corporation:

The Cognex logo, 1DMax, 3D-Locate, 3DMax, BGAII, CheckPoint, Cognex VSoC, CVC-1000, FFD, iLearn, In-Sight (design insignia with cross-hairs), In-Sight 2000, InspectEdge, Inspection Designer, MVS, NotchMax, OCRMax, PatMax RedLine, ProofRead, SmartSync, ProfilePlus, SmartDisplay, SmartSystem, SMD4, VisiFlex, Xpand

Portions copyright © Microsoft Corporation. All rights reserved.

Portions copyright © MadCap Software, Inc. All rights reserved.

Other product and company trademarks identified herein are the trademarks of their respective owners.

Regulations/Conformity

Note: For the most current CE declaration and regulatory conformity information, see the Cognex support site: cognex.com/support.

Declaration of Conformity	
Manufacturer	Cognex Corporation One Vision Drive Natick, MA 01760 USA
CE	In-Sight CIO-MICRO: Type 821-0016-1R; Type 821-0016-2R This is a class A product. In a domestic environment this product may cause radio interference in which case the user may be required to take immediate measures. This equipment complies with the essential requirements of the EU Directive 2014/30/EU. Declarations are available from your local representative.
EU RoHS	Compliant to the most recent applicable directive.
FCC	FCC Part 15, Class A This equipment has been tested and found to comply with the limits for a Class A digital device, pursuant to part 15 of the FCC Rules. These limits are designed to provide reasonable protection against harmful interference when the equipment is operated in a commercial environment. This equipment generates, uses, and can radiate radio frequency energy and, if not installed and used in accordance with the instruction manual, may cause harmful interference to radio communications. Operation of this equipment in a residential area is likely to cause harmful interference in which case the user will be required to correct the interference at his own expense.
Korea	In-Sight CIO-MICRO: CGX-CIO-MICRO(A) This device is certified for office use only and if used at home, there can be frequency interference problems.
TÜV	In-Sight CIO-MICRO: Type 821-0016-1R; Type 821-0016-2R
	NRTL: TÜV SÜD AM SCC/NRTL OSHA Scheme for UL/CAN 60950-1.
	CB report available upon request. TÜV SÜD AM, IEC/EN 60950-1.

Declaration of Conformity	
Manufacturer	Cognex Corporation One Vision Drive Natick, MA 01760 USA
CE	In-Sight CIO-MICRO-CC: Type 821-0017-1R; Type 821-0017-2R This is a class A product. In a domestic environment this product may cause radio interference in which case the user may be required to take immediate measures. This equipment complies with the essential requirements of the EU Directive 2014/30/EU. Declarations are available from your local representative.
EU RoHS	Compliant to the most recent applicable directive.
FCC	FCC Part 15, Class A This equipment has been tested and found to comply with the limits for a Class A digital device, pursuant to part 15 of the FCC Rules. These limits are designed to provide reasonable protection against harmful interference when the equipment is operated in a commercial environment. This equipment generates, uses, and can radiate radio frequency energy and, if not installed and used in accordance with the instruction manual, may cause harmful interference to radio communications. Operation of this equipment in a residential area is likely to cause harmful interference in which case the user will be required to correct the interference at his own expense.
TÜV	In-Sight CIO-MICRO-CC: Type 821-0017-1R; Type 821-0017-2R
	NRTL: TÜV SÜD AM SCC/NRTL OSHA Scheme for UL/CAN 60950-1.
	CB report available upon request. TÜV SÜD AM, IEC/EN 60950-1.

For European Community Users

Cognex complies with Directive 2012/19/EU OF THE EUROPEAN PARLIAMENT AND OF THE COUNCIL of 4 July 2012 on waste electrical and electronic equipment (WEEE).

This product has required the extraction and use of natural resources for its production. It may contain hazardous substances that could impact health and the environment, if not properly disposed.

In order to avoid the dissemination of those substances in our environment and to diminish the pressure on the natural resources, we encourage you to use the appropriate take-back systems for product disposal. Those systems will reuse or recycle most of the materials of the product you are disposing in a sound way.

The crossed out wheeled bin symbol informs you that the product should not be disposed of along with municipal waste and invites you to use the appropriate separate take-back systems for product disposal.

If you need more information on the collection, reuse, and recycling systems, please contact your local or regional waste administration.

You may also contact your supplier for more information on the environmental performance of this product.

Precautions

Observe these precautions when installing the I/O module to reduce the risk of injury or equipment damage:

- Power for the I/O module is intended to be supplied by a NRTL listed power supply with a 24VDC output rated at 750mA or more, a maximum short circuit current rating of less than 8A, a maximum power rating of less than 100VA, and marked Class 2 or Limited Power source (LPS). Any other voltage creates a risk of fire or shock and can damage the components. Applicable national and local wiring standards and rules must be followed.
- This product is intended for industrial use in automated manufacturing or similar applications.
- The safety of any system incorporating this product is the responsibility of the assembler of the system.
- The shield ground connections of the RS-232 port, LAN port, PoE port, I/O port and Frame Ground terminal are internally connected. The system grounding is at a zero ground potential. This zero-ground potential extends through the cable and to peripheral equipment, such as a vision system or PLC. To ensure safe operating conditions, check ground connections to ensure that they meet a zero ground potential.
- The I/O module must be grounded by attaching the I/O module's Frame Ground terminal to a frame ground.
- The I/O module is intended for indoor use only.
- Do not install the I/O module where it is directly exposed to environmental hazards such as excessive heat, dust, moisture, humidity, impact, vibration, corrosive substances, flammable substances, or static electricity without a protective enclosure.
- Route cables and wires away from high-current wiring or high-voltage power sources to reduce the risk of damage or malfunction from the following causes: over-voltage, line noise, electrostatic discharge (ESD), power surges, or other irregularities in the power supply.
- This product does not contain user-serviceable parts. Do not make electrical or mechanical modifications to product components. Unauthorized modifications can void your warranty.
- Changes or modifications not expressly approved by the party responsible for regulatory compliance could void the user's authority to operate the equipment.
- The maximum torque that can be applied to the terminal block connectors is 0.1921 Nm (1.7 in-lb). Applying torque above this limit can damage the connectors.
- Access to the encoder inputs on the In-Sight 5604 Line Scan are not supported by the I/O module.
- HS COMMON is not used for high-speed outputs with In-Sight 5000 series vision systems. The return must use 24V Common. See *In-Sight 5000 Series: I/O Module Sinks Current* on page 60.
- When you connect the In-Sight 7000 series vision system to the CIO-MICRO or CIO-MICRO-CC I/O module, the I/O module's I/O port (DB15) is not supported. Do not connect anything to this port.
- When you connect the In-Sight 7000 series vision system to the CIO-MICRO or CIO-MICRO-CC I/O module, the product does not support the following I/O module terminals: TRIGGER+, TRIGGER-, HSOUT 0, HSOUT 1 and HS COMMON. Do not connect wire leads from remote devices to these terminals.
- Include service loops with cable connections.
- Ensure that the cable bend radius begins at least six inches from the connector. Cable shielding can be degraded or cables can be damaged or wear out faster if a service loop or bend radius is tighter than 10X the cable diameter.
- This device should be used in accordance with the instructions in this manual.
- All specifications are for reference purposes only and can change without notice.

Table of Contents

Legal Notices **2**

Regulations/Conformity **3**

For European Community Users 4

Precautions **5**

Table of Contents **6**

Introduction **8**

Support 8

Cables 9

Ethernet Cable 9

I/O Module Cable (In-Sight Micro Series Vision System) 10

I/O Module Cable (In-Sight 5000 Series Vision System) 10

Installation **11**

Connectors and Indicators 11

Connect the I/O Module 13

Connect the Power Wires 13

Connect the Frame Ground Wire 14

Connect the Input and Output Wires (Optional) 15

Connect CC-Link Wires (Optional) 16

Connect an RS-232 Serial Cable (Optional) 17

Connect an RJ-45 LAN Cable 17

Connect to the In-Sight Micro Vision System 18

Connect the I/O Module Cable (Optional) 18

Connect the Ethernet Cable 19

Connect to the In-Sight 5000 Series Vision System 20

Connect the Ethernet Cable 20

Connect the I/O Module Cable 22

Connect to the In-Sight 7000 Series Vision System 23

Connect the Ethernet Cable 23

Connect the Power and I/O Breakout Cable 24

In-Sight Vision System Connections 25

Configure the I/O Module 25

Configure the Vision System 25

Specifications **26**

I/O Specifications 28

General-Purpose Inputs 28

General-Purpose Outputs 29

Trigger Input 30

High-Speed Outputs 31

Port and Terminal Block Specifications 33

LAN Port 33

PoE Port 33

RS-232 Port 34

I/O Port 35

Terminal Block Assignments 36

CC-Link Terminal Block Assignments 38
Dimensional Drawings 39

Wiring Inputs and Outputs 40

Trigger from Photoelectric Sensor or PLC 42
In-Sight Micro and 5000 Series: Photoelectric Sensor or PLC Sinks Current 42
In-Sight Micro and 5000 Series: Photoelectric Sensor or PLC Sources Current 43
Input from PLC 44
In-Sight Micro and 5000 Series: PLC Sinks Current 44
In-Sight Micro and 5000 Series: PLC Sources Current 45
In-Sight 7000 Series: PLC Sinks Current 46
In-Sight 7000 Series: PLC Sources Current 47
Output to PLC 48
In-Sight Micro and 5000 Series: I/O Module Sinks Current 48
In-Sight Micro and 5000 Series: I/O Module Sources Current 49
In-Sight 7000 Series: I/O Module Sinks Current 50
In-Sight 7000 Series: I/O Module Sources Current 51
Output to Pilot Light or Relay 52
In-Sight Micro and 5000 Series: I/O Module Sinks Current 52
In-Sight Micro and 5000 Series: I/O Module Sources Current 53
In-Sight 7000 Series: I/O Module Sinks Current 54
In-Sight 7000 Series: I/O Module Sources Current 55
High-Speed Output to Strobe Controller 56
In-Sight Micro Series: I/O Module Sinks Current 56
In-Sight Micro Series: I/O Module Sinks Current (Optically Isolated High-Speed Output) 57
In-Sight Micro Series: I/O Module Sources Current 58
In-Sight Micro Series: I/O Module Sources Current (Optically Isolated High-Speed Output) 59
In-Sight 5000 Series: I/O Module Sinks Current 60
Input from 3-Wire Photoelectric Sensor 61
In-Sight Micro and 5000 Series: Current Sourcing 61
In-Sight Micro and 5000 Series: Current Sinking 62
CIO-MICRO-CC CC-Link Connections 63
CC-Link Connection: Endpoint Configuration 63
CC-Link Connection: Midspan Configuration 64

Introduction

The In-Sight® CIO-MICRO and CIO-MICRO-CC I/O module provide a convenient way to access built-in features of the In-Sight vision system:

- For the In-Sight Micro and In-Sight 5000 series vision systems, the module provides access to the vision system's power, serial, trigger, and high-speed output connections.
- For the In-Sight 7000 series vision system, the module provides access to the vision system's serial connections.

These modules also extend the capabilities of the vision system by providing:

- 8 discrete inputs and 8 discrete outputs, optically isolated and over-voltage protected.
- LED status indicators for all discrete inputs and outputs.
- Support for current sinking (NPN) and current sourcing (PNP) devices.
- Hardware handshaking for serial communications.
- CC-Link communication capability (CIO-MICRO-CC only).
- Removable terminal blocks.
- DIN-rail mountable.

Note:

- The CIO-MICRO & CIO-MICRO-CC I/O modules support In-Sight 5100 series and 5400 series vision systems with 128MB non-volatile flash memory or higher and support all In-Sight 5600 series vision systems.
- For the purposes of this manual, the term “I/O module” refers to both the CIO-MICRO and CIO-MICRO-CC I/O modules, unless otherwise noted.

Support

Several resources are available to assist you in using the I/O module with the In-Sight vision system:

- *In-Sight® Explorer Help*, an online HTML Help file installed with In-Sight Explorer software.
- *In-Sight® Micro Series Vision System Installation Manual* (English, Chinese-simplified, German, Spanish-European, French, Japanese and Korean versions available).
- *In-Sight® 5000 Series Vision System Installation Manual* (English, Chinese-simplified, German, Spanish-European, French, Japanese and Korean versions available).
- *In-Sight® 7000 Series Vision System Installation Manual* (English, Chinese-simplified, German, Spanish-European, French, Japanese and Korean versions available).
- In-Sight computer-based tutorials provided with selected In-Sight starter accessories kits.
- In-Sight online support: http://www.cognex.com/Support/InSight.

Cables

Note: Cables are sold separately.

CAUTION: All cable connectors are keyed to fit the connectors on the vision system. Do not force the connections or damage may occur.

Ethernet Cable

The Ethernet cable provides the Ethernet connection for network communications. When connected to the In-Sight Micro vision system, this cable also supplies power to the vision system. This cable is available in the lengths and styles listed below.

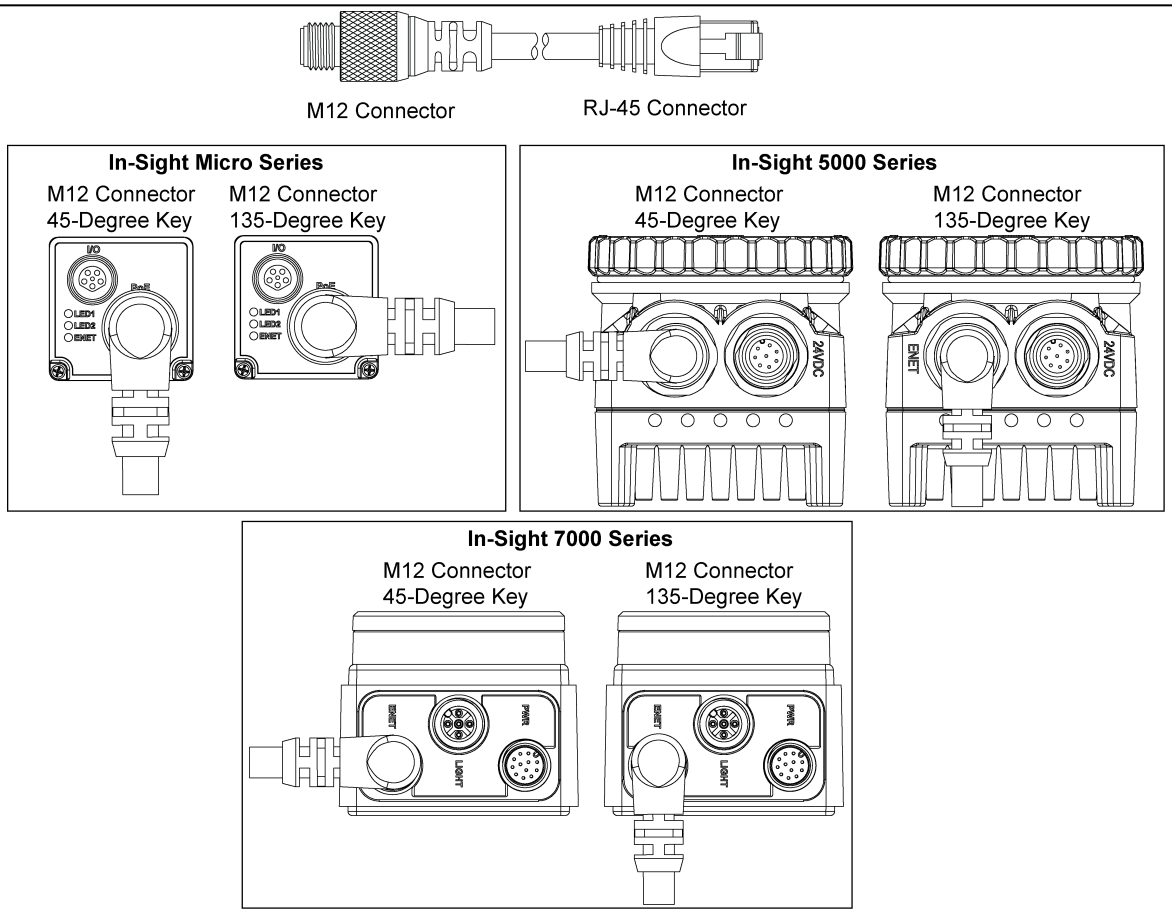

Length	Standard Part #	45-Degree Key Right-Angle Part #	135-Degree Key Right-Angle Part #
0.6 m	CCB-84901-1001-00	N/A	N/A
2 m	CCB-84901-1002-02	CCB-84901-6005-02	CCB-84901-7005-02
5 m	CCB-84901-1003-05	CCB-84901-6001-05	CCB-84901-7001-05
10 m	CCB-84901-1004-10	CCB-84901-6002-10	CCB-84901-7002-10
15 m	CCB-84901-1005-15	CCB-84901-6003-15	CCB-84901-7003-15
30 m	CCB-84901-1006-30	CCB-84901-6004-30	CCB-84901-7004-30

I/O Module Cable (In-Sight Micro Series Vision System)

The I/O Module cable provides access to the In-Sight Micro vision system's trigger and high-speed outputs This cable is available in the lengths listed below.

Note: The In-Sight Micro vision system uses only the TRIGGER+, TRIGGER-, HS OUT 0, HS OUT 1 and HS COMMON signals. It does not use the power that is available from the I/O module's I/O (DB15) connector.

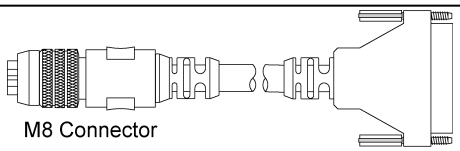

Length	Part #
0.7 m	CCB-M8DSIO-00
2 m	CCB-M8DSIO-02
5 m	CCB-M8DSIO-05
10 m	CCB-M8DSIO-10
15 m	CCB-M8DSIO-15

I/O Module Cable (In-Sight 5000 Series Vision System)

The I/O Module cable provides access to the In-Sight 5000 series vision system's power, trigger, high-speed outputs and 24V Common signals. This cable is available in the lengths and styles listed below.

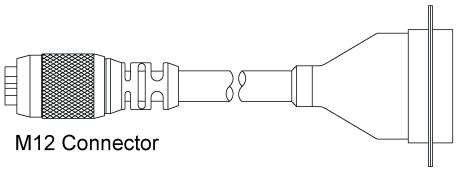

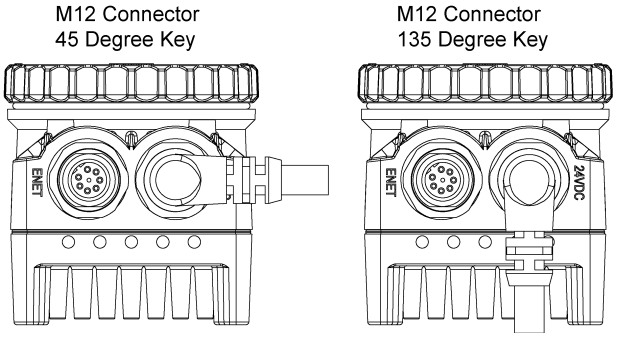

Length	Standard Part #	45-Degree Key Right-Angle Part #	35-Degree Key Right-Angle Part #
2 m	CCB-84901-0901-02	CCB-84901-4001-02	CCB-84901-5001-02
5 m	CCB-84901-0902-05	CCB-84901-4002-05	CCB-84901-5002-05
10 m	CCB-84901-0903-10	CCB-84901-4003-10	CCB-84901-5003-10
15 m	CCB-84901-0904-15	CCB-84901-4004-15	CCB-84901-5004-15

Installation

This section explains how to connect the CIO-MICRO or CIO-MICRO-CC I/O module to the vision system. For a list of options and accessories, contact your Cognex sales representative.

Note:
- Cables are sold separately.
- If a standard component is missing or damaged, immediately contact your Cognex Authorized Service Provider (ASP) or Cognex Technical Support.

Connectors and Indicators

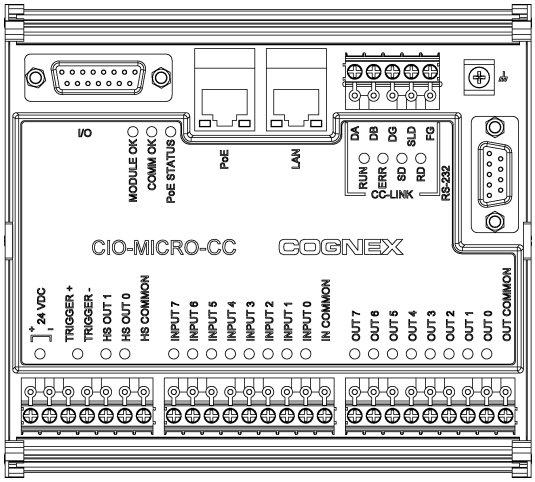

Connector/Indicator	Description
I/O Port	Connects the I/O module to the In-Sight Micro and In-Sight 5000 series vision system using the I/O Module cable, and provides trigger and high-speed output signals to the vision system. The I/O port also provides power to In-Sight 5000 series vision systems. **CAUTION**: When you connect the In-Sight 7000 series vision system to the CIO-MICRO or CIO-MICRO-CC I/O module, the I/O module's I/O port (DB15) is not supported. Do not connect anything to this port.
MODULE OK LED	A green LED illuminates after the I/O module has powered on, has booted up, and is ready to communicate with the vision system.
COMM OK LED	A green LED blinks continuously until the vision system has established a successful connection to the I/O module from In-Sight software. Once successfully connected and communicating properly, the green LED is constantly illuminated.
PoE STATUS LED	A green LED illuminates to indicate that the In-Sight Micro vision system is physically connected to the I/O module, and the vision system is receiving Power over Ethernet (PoE) from the I/O module. When a non-POE device is connected to the I/O module's PoE port, the POE STATUS LED may blink. This is normal and does not affect operation of the vision system.
PoE Port	Connects the I/O module to the vision system, providing the vision system with Ethernet and also provides Power over Ethernet (PoE) to In-Sight Micro vision systems.
PoE Port LEDs	The green LED blinks when a network connection to the vision system is detected. The orange LED blinks when network activity is detected.

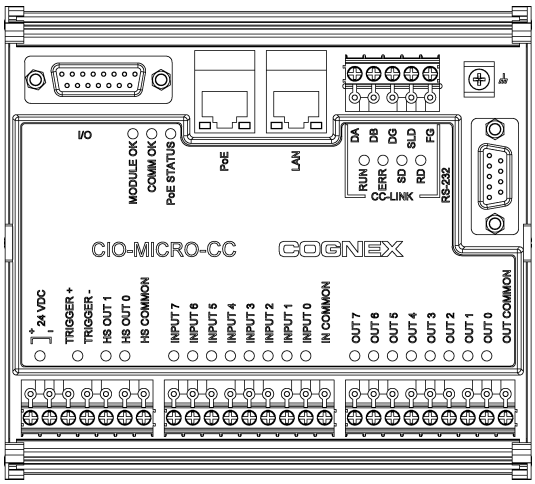

Connector/Indicator	Description
LAN Port	Connects the I/O module to an Ethernet network.
LAN Port LEDs	The green LED blinks when a network connection to the local area network is detected. The orange LED blinks when network activity is detected.
CC-Link Status LEDs	CIO-MICRO-CC only: Green and red LEDs that illuminate to indicate RUN, ERR, SD, and RD for a CC-Link operation status.
Frame Ground Terminal	Connects the I/O module to a frame ground.
RS-232 Port	Connects the I/O module to an external serial device using an RS-232 (DB9) serial cable. Provides RS-232 communications to the vision system.
High-Speed Output Status LEDs (HS OUT 0 and HS OUT 1)	Green LEDs that illuminate to indicate the high-speed output signal for the In-Sight vision system has switched ON. The LEDs will illuminate even if the I/O module's high-speed terminals are not connected to anything. In addition, the I/O module displays the last known state of the high-speed output line, therefore the LEDs may be illuminated even if the vision system is disconnected from the I/O module.
I/O and Trigger Status LEDs	Green LEDs that illuminate to indicate that an input/output signal has switched ON.
Terminal Blocks	Connects the I/O module to 24VDC power, trigger, external I/O, high-speed outputs, CC-Link (CIO-MICRO-CC only) and common connections. **CAUTION**: When you connect the In-Sight 7000 series vision system to the CIO-MICRO or CIO-MICRO-CC I/O module, the product does not support the following I/O module terminals: TRIGGER+, TRIGGER-, HSOUT 0, HSOUT 1 and HS COMMON. Do not connect wire leads from remote devices to these terminals. **Note**: • The I/O module's high-speed output terminals (labeled HS OUT 0 and HS OUT 1) correspond to the In-Sight Micro and 5000 series vision system's built-in high-speed outputs. These signals are considered high-speed because they pass directly through the I/O module without processing, which provides minimal delay. • The I/O module does not provide access to the In-Sight 7000 series vision system's high-speed outputs. The In-Sight 7000 series vision system's high-speed outputs are accessible from only the vision system Breakout cable.

Connect the I/O Module

Connect the Power Wires

CAUTION: Never connect the I/O module to a power source other than 24VDC. Any other voltage creates a risk of fire or shock and can damage the hardware. Do not connect the 24VDC power source to any terminals other than the 24VDC + and – power terminals.

1. Verify that the 24VDC power supply is unplugged and not receiving power.
2. Use a screwdriver to loosen the I/O module's power terminals (labeled 24VDC + and –).
3. Insert the 24VDC + and – wires (16 - 22 AWG, solid or stranded wire) from the power supply into the 24VDC + and – terminals on the I/O module.
4. Tighten the screw terminals with the screwdriver to secure the wire leads in the terminal block; the maximum torque is 0.1921 Nm (1.7 in-lb).

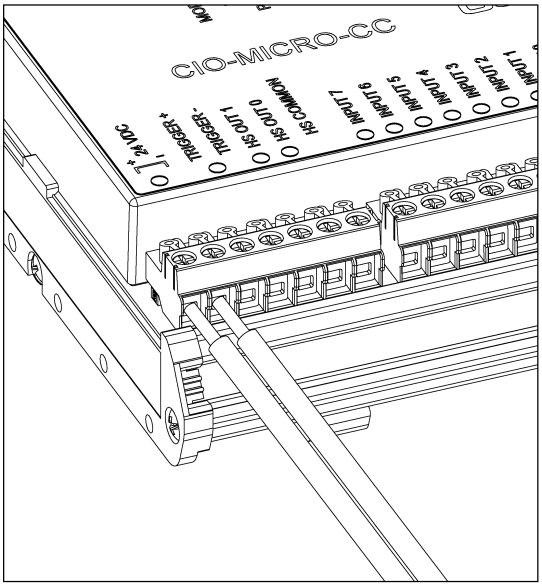

Connect the Frame Ground Wire

Connect a frame ground wire to the I/O module's Frame Ground terminal. Connect the other end of the frame ground wire to frame ground.

CAUTION: The shield ground connections of the RS-232 port, LAN port, PoE port, I/O port and Frame Ground terminal are internally connected. The system grounding is at a zero ground potential. This zero-ground potential extends through the cable and to peripheral equipment, such as a vision system or PLC. To ensure safe operating conditions, check ground connections to ensure that they meet a zero ground potential.

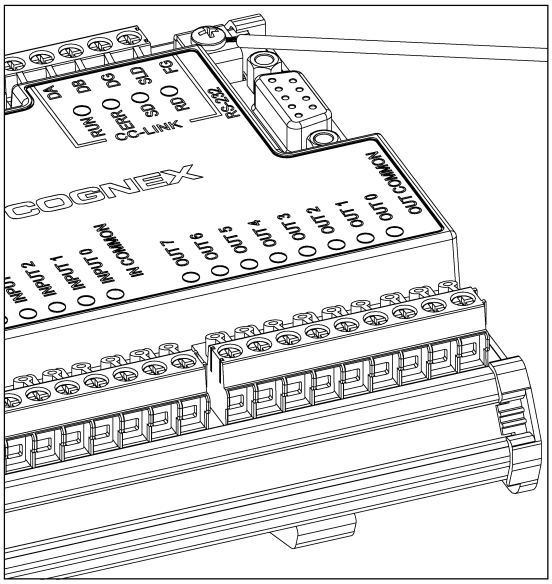

Connect the Input and Output Wires (Optional)

CAUTION: When you connect the In-Sight 7000 series vision system to the CIO-MICRO or CIO-MICRO-CC I/O module, the product does not support the following I/O module terminals: TRIGGER+, TRIGGER-, HSOUT 0, HSOUT 1 and HS COMMON. Do not connect wire leads from remote devices to these terminals.

1. Determine how I/O devices will be connected to the I/O module's input and output terminals. Refer to *Wiring Inputs and Outputs* on page 40 for common wiring configurations.
2. To loosen the appropriate screw terminals, use a screwdriver.
3. Insert the input and output wires (16 - 22 AWG, solid or stranded wire) to the input and output terminals. Connect the other end of the input and output wires to the applicable I/O device. Refer to *Port and Terminal Block Specifications* on page 33 for port and terminal block pin assignments.

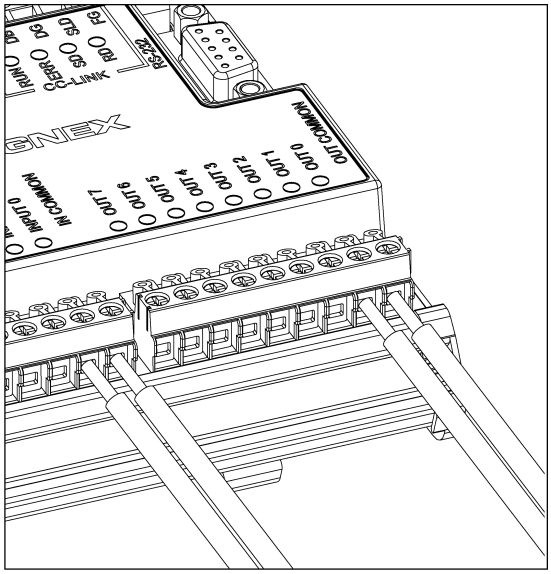

4. Tighten the screw terminals with the screwdriver to secure the wire leads in the terminal block; the maximum torque is 0.1921 Nm (1.7 in-lb).

Connect CC-Link Wires (Optional)

Note: The CC-Link terminals are only available on the CIO-MICRO-CC I/O module.

1. Determine how CC-Link devices will be connected to the I/O module's CC-Link terminals.
2. To loosen the appropriate screw terminals, use a screwdriver.
3. Insert the CC-Link wires (using a CC-Link specified cable) to the CC-Link terminals and the other end of the cables to the applicable CC-Link devices. Refer to *CC-Link Terminal Block Assignments* on page 38 for terminal block pin assignments. Refer to *Wiring Inputs and Outputs* on page 40 for common wiring configurations.
4. To reduce emissions, attach a Steward 28A0640-0A2 ferrite around the CC-Link wire bundle as close to the connector as possible.

   Note: The CC-Link network is daisy-chained and requires a terminal resistor for the first and last devices in the chain. Make certain that your connections are correct. Refer to the CC-Link website for more information and specification details.

5. Tighten the screw terminals with the screwdriver to secure the wire leads in the terminal block; the maximum torque is 0.1921 Nm (1.7 in-lb).

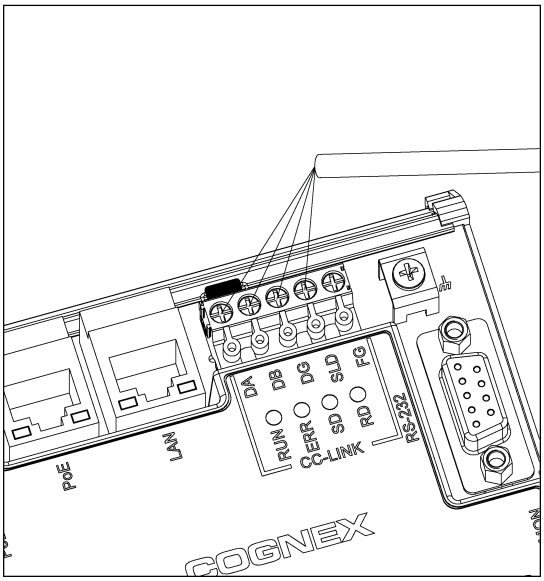

Connect an RS-232 Serial Cable (Optional)

To connect the vision system to a serial device, plug an RS-232 serial cable (DB9 connector) into the I/O module's RS-232 port and then connect the other end of the cable to the serial device. To secure the cable to the I/O module, tighten the connector screws.

Note: When you configure the In-Sight 7000 series vision system for use with the CIO-MICRO or CIO-MICRO-CC I/O module, the RS-232 TRANSMIT and RS-232 RECEIVE pins on the Breakout cable are disabled. To connect to a serial device, use the I/O module's RS-232 port (DB9).

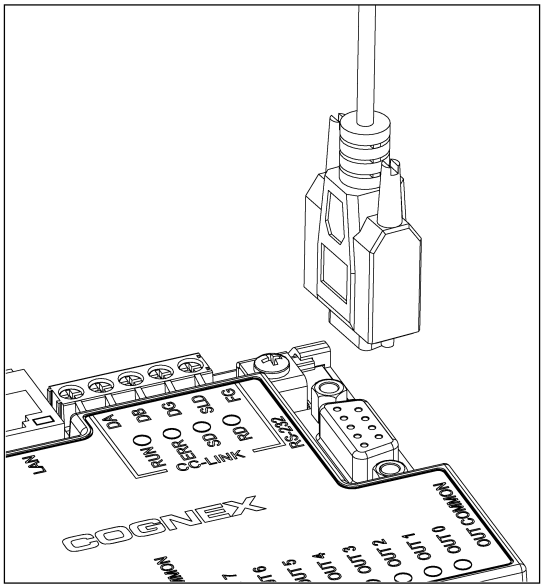

Connect an RJ-45 LAN Cable

To connect the vision system to an Ethernet network, plug a LAN cable (RJ-45 connector) into the I/O module's LAN port and connect the other end of the cable to a switch/router or PC, as applicable.

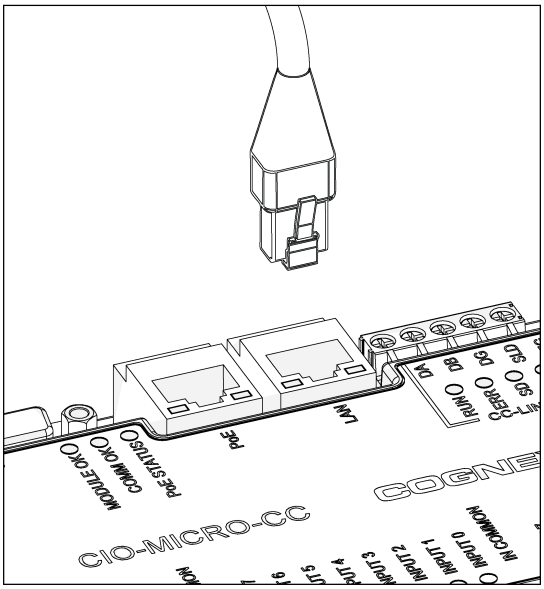

Connect to the In-Sight Micro Vision System

Connect the I/O Module Cable (Optional)

The I/O module's I/O port supplies connections for the In-Sight Micro vision system's acquisition trigger and high-speed outputs.

CAUTION: All cable connectors are keyed to fit the connectors on the vision system. Do not force the connections or damage may occur.

1. Connect the I/O Module cable's M8 connector to the vision system I/O connector.

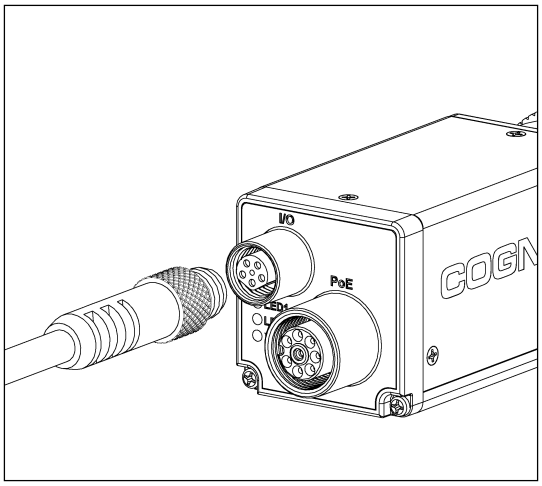

2. Connect the I/O Module cable's DB15 connector to the I/O module's I/O connector.

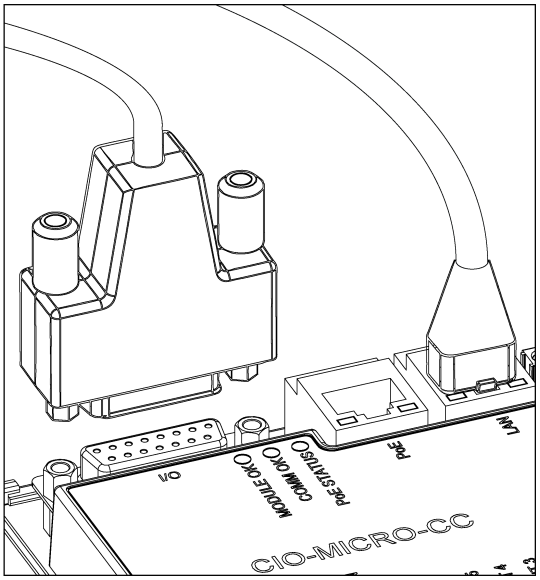

Connect the Ethernet Cable

The I/O module's PoE port provides power and Ethernet connectivity to the In-Sight Micro vision system.

CAUTION:

- All cable connectors are keyed to fit the connectors on the vision system. Do not force the connections or damage may occur.
- If you connect third-party devices to the I/O module's PoE port, you could damage the I/O module.

1. Connect the Ethernet cable's M12 connector to the vision system PoE connector.

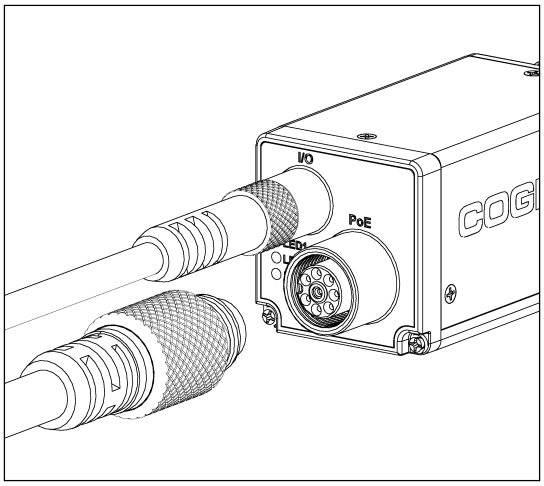

2. Connect the Ethernet cable's RJ-45 connector to the I/O module's PoE port.

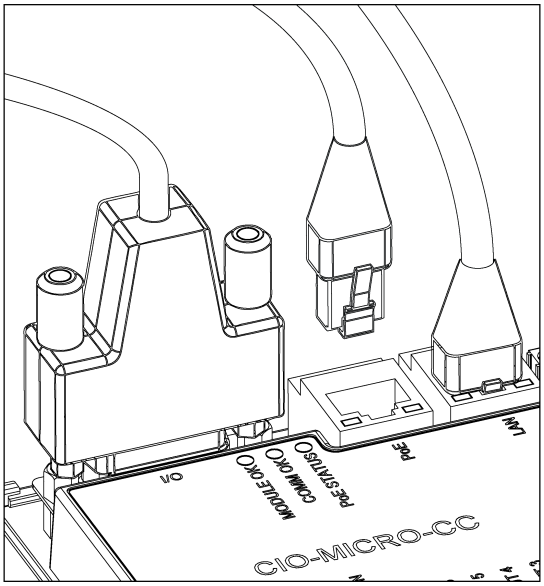

3. Restore power to the I/O module's 24VDC power supply and turn it on if necessary.
4. Use In-Sight Explorer software to configure the vision system and I/O module. For more information, refer to the *In-Sight® Explorer Help* file, which is available from the Help menu or by pressing the F1 key.

Connect to the In-Sight 5000 Series Vision System

Note: The CIO-MICRO & CIO-MICRO-CC I/O modules support In-Sight 5100 series and 5400 series vision systems with 128MB non-volatile flash memory or higher and support all In-Sight 5600 series vision systems.

Connect the Ethernet Cable

The I/O module's PoE port provides Ethernet connectivity to the In-Sight 5000 series vision system.

CAUTION:

- All cable connectors are keyed to fit the connectors on the vision system. Do not force the connections or damage may occur.
- If you connect third-party devices to the I/O module's PoE port, you could damage the I/O module.

1. Connect the Ethernet cable's M12 connector to the vision system ENET connector.

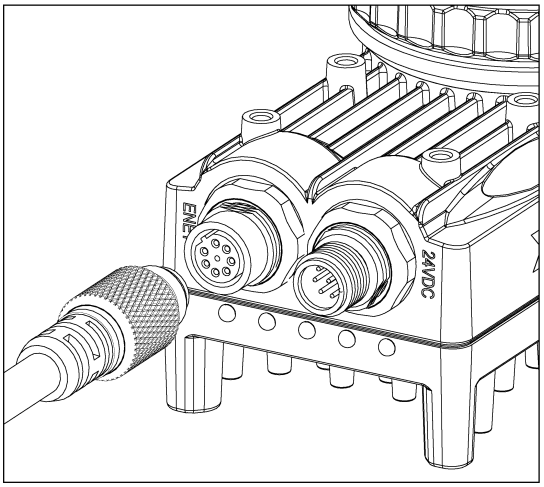

2. Connect the Ethernet cable's RJ-45 connector to the I/O module's PoE port.

> **Note**: The CIO-MICRO and CIO-MICRO-CC I/O modules do not support Gigabit pass-through operation. If you need Gigabit operation when you use the In-Sight 5600 series or In-Sight 5700 series vision system, connect a LAN cable from a Gigabit Ethernet switch to the I/O module LAN port and connect the vision system Ethernet cable to the Gigabit Ethernet switch.

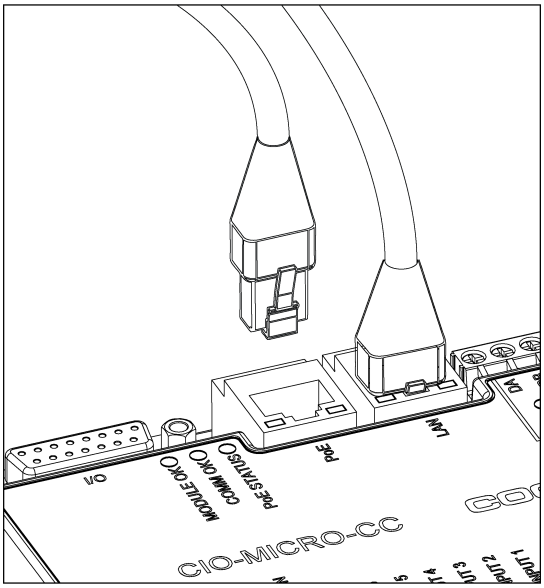

Connect the I/O Module Cable

The I/O module's I/O port supplies power to the 5000 series vision system, and provides access to the vision system's trigger and high-speed outputs.

CAUTION: All cable connectors are keyed to fit the connectors on the vision system. Do not force the connections or damage may occur.

1. Connect the I/O Module cable's M12 connector to the vision system's 24VDC connector.

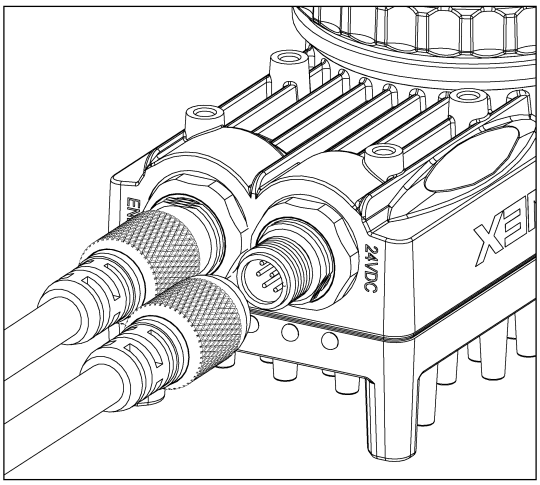

2. Connect the I/O Module cable's DB15 connector to the I/O module's I/O connector.

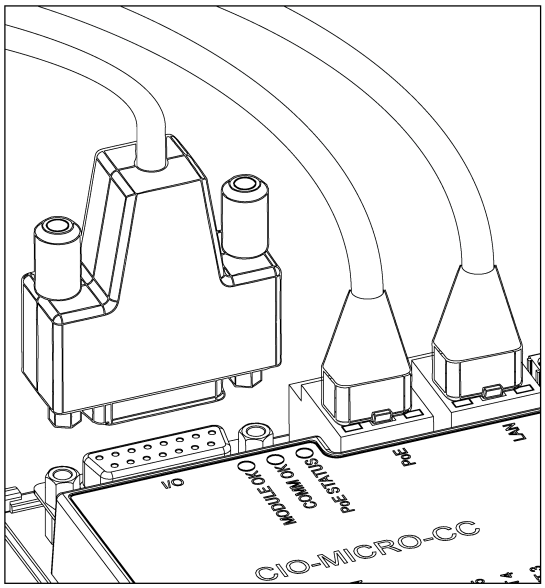

3. Restore power to the I/O module's 24VDC power supply and turn it on if necessary.
4. Use In-Sight Explorer software to configure the vision system and I/O module. For more information, refer to the *In-Sight® Explorer Help* file, which is available from the Help menu or by pressing the F1 key.

Connect to the In-Sight 7000 Series Vision System

Connect the Ethernet Cable

The I/O module's PoE port provides Ethernet connectivity to the In-Sight 7000 series vision system.

CAUTION:

- All cable connectors are keyed to fit the connectors on the vision system. Do not force the connections or damage may occur.
- If you connect third-party devices to the I/O module's PoE port, you could damage the I/O module.

Tip: The space between the vision system connectors is limited. If installing the Light cable to the In-Sight 7000 series vision system, it is recommended to connect the Light cable first, to ensure enough space for the connection of the Ethernet cable and Power and I/O Breakout cable. Refer to the *In-Sight® 7000 Series Vision System Installation Manual* for more information.

1. Connect the Ethernet cable's M12 connector to the vision system ENET connector.

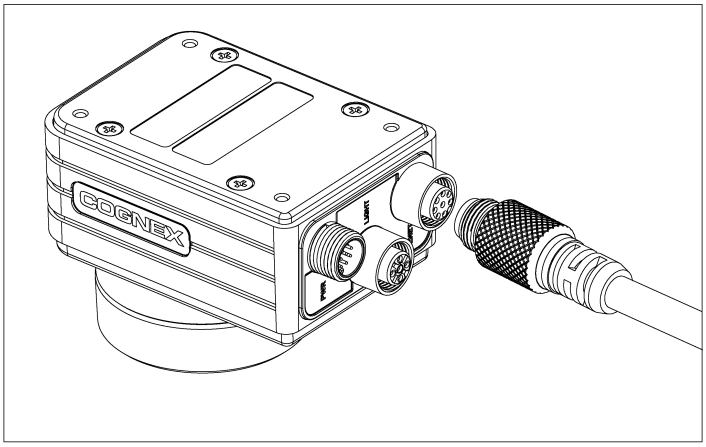

2. Connect the Ethernet cable's RJ-45 connector to the I/O module's PoE port.

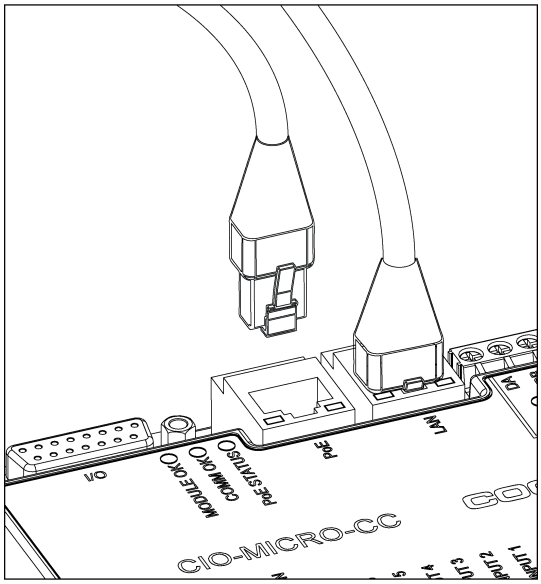

Connect the Power and I/O Breakout Cable

The Power and I/O Breakout cable must be used to supply power to the In-Sight 7000 series vision system. The Power and I/O Breakout cable also provides access to the vision system's trigger, general-purpose inputs, high-speed outputs and RS-232 communications. Refer to the *In-Sight® 7000 Series Vision System Installation Manual* for more information.

Note:

- The power supplies for the vision system and I/O module can be combined into a single power supply, provided the single power supply meets the capacity requirements of the two devices.
- When you configure the In-Sight 7000 series vision system for use with the CIO-MICRO or CIO-MICRO-CC I/O module, the RS-232 TRANSMIT and RS-232 RECEIVE pins on the Breakout cable are disabled. To connect to a serial device, use the I/O module's RS-232 port (DB9). Refer to *Connect an RS-232 Serial Cable (Optional)* on page 17.
- You can clip unused wires short or use a tie made of non-conductive material to tie them back.

1. Verify that the vision system's 24VDC power supply is unplugged and not receiving power.
2. Optionally connect the Power and I/O Breakout cable's I/O wires to an appropriate device (for example, a PLC). Refer to the *In-Sight® 7000 Series Vision System Installation Manual* for more information.
3. Attach the Breakout cable's +24VDC (Red wire) and GND (Black wire) to the corresponding terminals on the power supply.

   CAUTION: Never connect voltages other than 24VDC. Always observe the polarity shown.

4. Connect the Breakout cable's M12 connector to the vision system PWR connector.

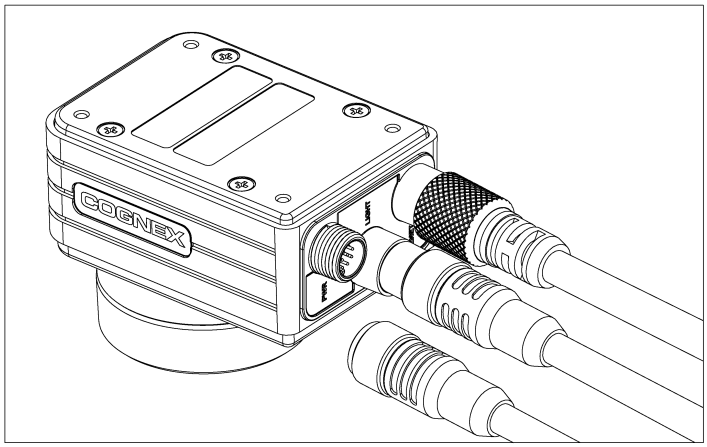

5. Restore power to the vision system's 24VDC power supply and turn it on if necessary.
6. Restore power to the I/O module's 24VDC power supply and turn it on if necessary.
7. Use In-Sight Explorer software to configure the vision system and I/O module. For more information, refer to the *In-Sight® Explorer Help* file, which is available from the Help menu or by pressing the F1 key.

In-Sight Vision System Connections

Note the following regarding connections to the I/O module:

- By default, the I/O module uses DHCP to obtain an IP address and connect to a network. If no DHCP server is available, the I/O module times out and binds to a link-local IP address. The I/O module can also be configured with a static IP address.
- The I/O module connects to the first supported In-Sight vision system that requests a connection.
- A connection to the I/O module can come from a supported In-Sight vision system connected directly to the I/O module using the PoE port or from the network to which the I/O module is connected via the LAN port.
- The connection between the I/O module and the vision system is maintained when power is cycled.

Configure the I/O Module

Using In-Sight Explorer, you can modify the I/O module's host name and configure the network settings using the Spreadsheet View or EasyBuilder View. For more information, refer to the *In-Sight® Explorer Help* file, which is available from the Help menu or by pressing the F1 key.

Configure the Vision System

Using In-Sight Explorer, you can configure the vision system to use the In-Sight CIO-MICRO and CIO-MICRO-CC I/O module. For more information, refer to the *In-Sight® Explorer Help* file, which is available from the Help menu or by pressing the F1 key.

Specifications

The following sections list general specifications for the In-Sight CIO-MICRO and CIO-MICRO-CC I/O modules.

Specifications	Description
Minimum Firmware Requirement	CIO-MICRO: In-Sight version 4.2.0. CIO-MICRO-CC: In-Sight version 4.3.0.
Compatibility	In-Sight Micro series, In-Sight 5000 series[1] and In-Sight 7000 series vision systems.
Trigger	Optically isolated Trigger input.[2]
Inputs	8 general-purpose, optically isolated discrete inputs.
Outputs	8 general-purpose, optically isolated discrete outputs.
High Speed Outputs	In-Sight Micro series: 2 optically isolated NPN/PNP high-speed outputs. In-Sight 5000 series: 2 NPN high-speed outputs. In-Sight 7000 series: The I/O module does not provide access to the In-Sight 7000 series vision system's high-speed outputs. The In-Sight 7000 series vision system's high-speed outputs are accessible from only the vision system Breakout cable.
CC-Link	CIO-MICRO-CC only. Standard CC-Link terminal connectors. See the CC-Link specifications for more information.
Ethernet (LAN) Port	RJ-45 10/100 port (IEEE 802.3 Type 10Base-T; IEEE 802.3u Type 100Base-TX; IEEE 802.3ab 100Base-T Ethernet).
PoE Port	RJ-45 10/100 port (IEEE 802.3 Type 10Base-T; IEEE 802.3u Type 100Base-TX; IEEE 802.3ab 100Base-T Ethernet) with PoE.
Serial (RS-232) Port	1 RS-232C port (4800 to 115,200 baud), 8 data bits, 1 stop bit, RxD, TxD, and flow control (RTS/CTS & XON/XOFF).
I/O Port	In-Sight Micro series: DB15 I/O providing TRIGGER+, TRIGGER-, HS OUT 0, HS OUT 1 and HS COMMON signals. In-Sight 5000 series: DB15 I/O providing TRIGGER+, TRIGGER-, HS OUT 0 and HS OUT 1 signals, +24VDC and 24V Common. In-Sight 7000 series: When you connect the In-Sight 7000 series vision system to the CIO-MICRO or CIO-MICRO-CC I/O module, the I/O module's I/O port (DB15) is not supported. Do not connect anything to this port.
Status LEDs	MODULE OK, COMM OK, PoE STATUS, Trigger, and one for each input and output. CIO-MICRO-CC only: CC-Link status LED for RUN, ERR, RD, and SD.
Housing	Aluminum with black plastic cover.
Mounting	#3 DIN-rail (35mm)
Dimensions	Width: 139.5mm (5.49in), Depth: 125.4mm (4.94in), Height: 51.3mm (2.02in)
Terminal Blocks	16 - 22 AWG, solid or stranded wire. Torque 0.1921 Nm (1.7 in-lb.)
Weight	587 g (20.7 oz.)
Current	600mA (maximum)
Voltage	24VDC ± 10%
Power Consumption	14.4W (maximum)
Power Supply	+24VDC ± 10%

[1] The CIO-MICRO & CIO-MICRO-CC I/O modules support In-Sight 5100 series and 5400 series vision systems with 128MB non-volatile flash memory or higher and support all In-Sight 5600 series vision systems.

[2] The I/O module does not provide access to the In-Sight 7000 series vision system's Trigger input. The In-Sight 7000 series vision system's Trigger input is only accessible from the vision system's Power and I/O Breakout cable.

Specifications	Description
Temperature	Operating: 0°C to 45°C (32°F to 113°F) Storage: -10°C to 65°C (14°F to 149°F)
Humidity	Operating and Storage: 0 to 90%, non-condensing
Altitude	2000m (6565ft)
Pollution Degree	2
Shock	30 G per IEC 68-2-27
Vibration	2 G per IEC 68-2-6
Regulatory Compliance	CE, FCC, TÜV SÜD NRTL, RoHS

I/O Specifications

Connection examples for the I/O module's general-purpose inputs and outputs, trigger input and high-speed outputs are provided in the following sections.

Note: The vision system must be Online for the discrete inputs and outputs to function.

General-Purpose Inputs

The I/O module extends the capabilities of the vision system by providing eight independent, general-purpose inputs (INPUT 0 - INPUT 7) that can be used to trigger vision system events. General-purpose inputs are optically isolated and are typically connected (directly or indirectly) to a sensor (such as a limit, pressure, or temperature sensor). Refer to *Wiring Inputs and Outputs* on page 40 for common wiring configurations.

CAUTION: All general-purpose inputs share a common connection (IN COMMON). Therefore, all input devices must be the same; either current sinking or current sourcing. Mixing inputs with sinking and sourcing could damage the I/O module or your devices.

Specification		Description
Voltage		30VDC maximum (24VDC nominal)
Current		10.4mA maximum
Delay	Module	150µs (maximum delay due to the I/O module)
	Total	1.25ms (time between an input state change at the I/O module and completion of transmission to the supported In-Sight vision system, which is 2ms maximum)

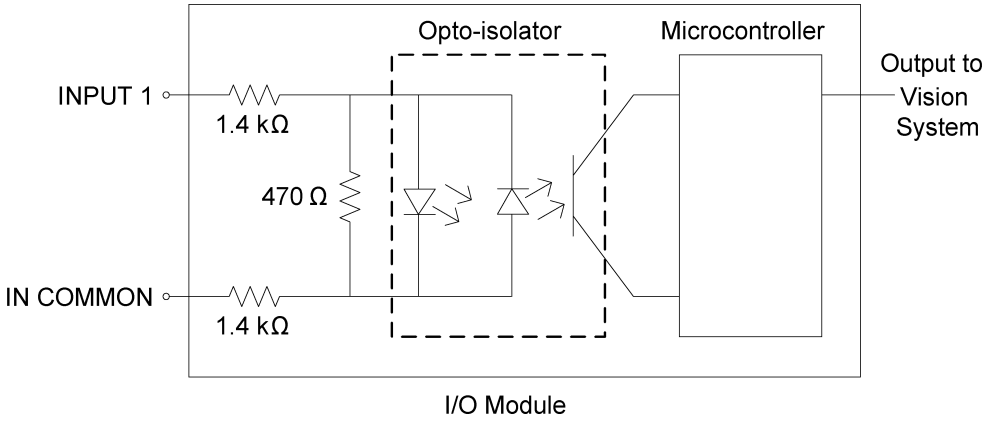

General-Purpose Outputs

The I/O module extends the capabilities of the vision system by providing eight independent, general-purpose outputs (OUT 0 - OUT 7) that can be used to trigger remote events. General-purpose outputs are optically isolated and are typically connected (directly or indirectly) to a load (such as a relay, indicator light or motor). Refer to *Wiring Inputs and Outputs* on page 40 for common wiring configurations.

CAUTION: All general-purpose outputs share a common connection (OUT COMMON). Therefore, all output devices must be the same; either current sinking or current sourcing. Mixing outputs with sinking and sourcing could damage the I/O module or your devices.

Specification		Description
Voltage		30VDC maximum (24VDC nominal)
Current		100mA (max), auto-reset fuse protection
Delay	Module	150µs (maximum delay due to the I/O module)
	Total	2ms (time between an input state change and completion of transmission to the supported In-Sight vision system)

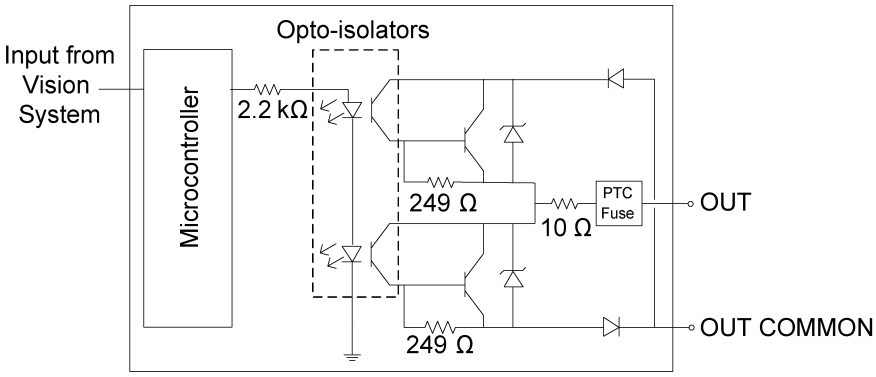

I/O Module

Trigger Input

The I/O module provides inputs for triggering the In-Sight Micro or In-Sight 5000 series vision system (TRIGGER + or TRIGGER -). When the I/O module is connected to the vision system, trigger input signals travel directly through the I/O module and are optically isolated in the vision system. Trigger inputs are typically connected (directly or indirectly) to a sensor (such as a photo-detector). Refer to *Wiring Inputs and Outputs* on page 40 for common wiring configurations.

CAUTION: When connecting the In-Sight 7000 series vision system to the CIO-MICRO or CIO-MICRO-CC I/O module, the I/O module's TRIGGER+ and TRIGGER- terminals are not supported. Do not connect wire leads from remote devices to these terminals.

Specification	Description
Voltage	ON: 20 to 28VDC (24VDC nominal) OFF: 0 to 3VDC (8VDC nominal threshold)
Current	ON: 5mA to 7.7mA OFF: < 250µA Resistance: ~3.5 kOhms

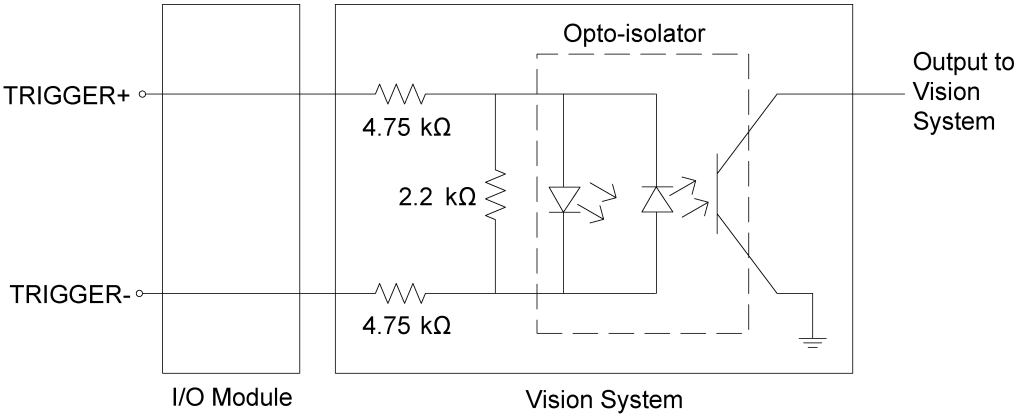

High-Speed Outputs

The I/O module provides two high-speed discrete outputs (HS OUT 0 and HS OUT 1) that can be used to trigger remote events to the In-Sight Micro and In-Sight 5000 series vision systems. High-speed output signals travel through the I/O module without processing. The outputs are typically connected (directly or indirectly) to a load (such as a relay, indicator light or a motor). Refer to *Wiring Inputs and Outputs* on page 40 for common wiring configurations.

Note: The I/O module does not provide access to the In-Sight 7000 series vision system's high-speed outputs. The In-Sight 7000 series vision system's high-speed outputs are accessible from only the vision system Breakout cable.

CAUTION: When connecting the In-Sight 7000 series vision system to the CIO-MICRO or CIO-MICRO-CC I/O module, the I/O module's HS OUT 0, HS OUT 1 and HS COMMON terminals are not supported. Do not connect wire leads from remote devices to these terminals.

In-Sight Micro Vision Systems

The In-Sight Micro vision system features two built-in, high-speed outputs, which are optically isolated. The high-speed outputs can be used as either NPN (current sinking) or PNP (current sourcing) lines.

Specification	Description
Voltage	28VDC maximum through external load.
Current	100mA maximum sink current.
	OFF state leakage current 100µA maximum.
	External load resistance 240 Ohms to 10 kOhms.
	Each line rated at a maximum 100mA, protected against over-current, short circuit and transients from switching inductive loads. High current inductive loads require an external protection diode.
Delay[1][2]	5µs (maximum due to opto-isolators turning ON).

CAUTION:

- Do not connect a high-speed output to OUT COMMON. High-speed outputs use HS COMMON as a return path.
- Since both high-speed outputs share a common return (HS COMMON), when both HS OUT 0 and HS OUT 1 are used, both must be current sinking or current sourcing. Do not mix current sinking and current sourcing on high-speed outputs.

[1] Delay when opto-isolators turn OFF depends on the load to which the output is connected. With a 240 Ohm load, the maximum delay will be 35µs.

[2] If HS OUT 1 is configured as a Strobe output type within In-Sight Explorer, the maximum strobe latency is 5µs. For more information, refer to the *In-Sight® Explorer Help* file.

In-Sight 5000 Series Vision Systems

In-Sight 5000 series vision systems feature two built-in, high-speed outputs. Both of the high-speed outputs are NPN (current sinking) lines.

Specification	Description	
Voltage	28VDC maximum through external load.	
Current	All In-Sight 5000 series (except In-Sight 5600 series)	200mA maximum sink current.
		OFF state leakage current 200µA maximum.
		External load resistance 140 Ohms to 10 kOhms.
		Each line rated at a maximum 200mA, protected against over-current, short circuit and transients from switching inductive loads. High current inductive loads require external protection diode.
	In-Sight 5600 series	100mA maximum sink current.
		OFF state leakage current 200µA maximum.
		External load resistance 280 Ohms to 10 kOhms.
		Each line rated at a maximum 100mA, protected against over-current, short circuit and transients from switching inductive loads. High current inductive loads require an external protection diode.
Delay[1][2]	±5µs (maximum due to opto-isolators turning ON).	

CAUTION:

- Do not connect a high-speed output to HS COMMON or OUT COMMON. Use 24V Common for the return.
- Since both high-speed outputs share a common return (24V Common), when both HS OUT 0 and HS OUT 1 are used, both must be current sinking.
- Do not use the high-speed outputs if you need to isolate your connections. Use the general-purpose outputs, which are optically isolated.

[1] Delay when opto-isolators turn OFF depends on the load to which the output is connected. With a 240 Ohm load, the maximum delay will be ±5µs.

[2] If HS OUT 1 is configured as a Strobe output type within In-Sight Explorer, the maximum strobe latency is ±5µs. For more information, refer to the *In-Sight® Explorer Help* file.

Port and Terminal Block Specifications

The following sections provide specifications for the CIO-MICRO and CIO-MICRO-CC I/O module ports and terminal blocks.

LAN Port

The LAN port is a standard RJ-45 Ethernet port that can be used to connect the I/O module to an Ethernet network.

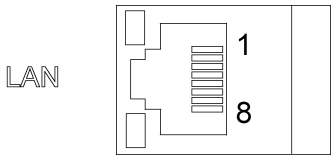

Pin#	Signal Name	Wire Color
1	Transmit +	White/Orange
2	Transmit -	Orange
3	Receive +	White/Green
4	N/A	Blue
5	N/A	White/Blue
6	Receive -	Green
7	N/A	White/Brown
8	N/A	Brown

PoE Port

The PoE port is an RJ-45 port that connects the I/O module to the vision system, providing the vision system with Ethernet, and also provides Power over Ethernet (PoE) to In-Sight Micro vision systems.

CAUTION: If you connect third-party devices to the I/O module's PoE port, you could damage the I/O module.

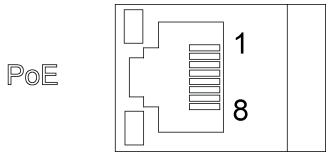

Pin#	Signal Name	Wire Color
1	TPO+/+48VDC (Mode A)	White/Orange
2	TPO-/+48VDC (Mode A)	Orange
3	TPI+/+48VDC RTN (Mode A)	White/Green
4	Spare A	Blue
5	Spare A	White/Blue
6	TPI-/+48VDC RTN (Mode A)	Green
7	Spare B	White/Brown
8	Spare B	Brown

RS-232 Port

The RS-232 port is a DB9 port that provides serial communication to the vision system.

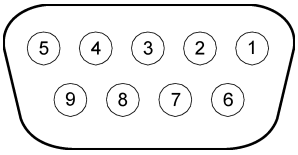

Pin#	Signal Name
1	No Connect
2	TxD
3	RxD
4	No Connect
5	GND
6	No Connect
7	CTS
8	RTS
9	No Connect

I/O Port

The I/O port is a DB15 port that allows the In-Sight Micro and In-Sight 5000 series vision system to handle triggers and high-speed outputs. The I/O port also provides power to the In-Sight 5000 series vision systems.

CAUTION: When you connect the In-Sight 7000 series vision system to the CIO-MICRO or CIO-MICRO-CC I/O module, the I/O module's I/O port (DB15) is not supported. Do not connect anything to this port.

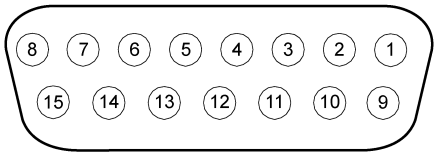

Pin#	Signal Name
1	+24VDC[1]
2	TRIGGER +
3	TRIGGER -
4	HS OUT 0
5	HS OUT 1
6	Not Used
7	Not Used
8	24V Common[2]
9	Not Used
10	Not Used
11	Not Used
12	Not Used
13	Not Used
14	Not Used
15	HS COMMON[3]

[1] These lines are used to power the In-Sight 5000 series vision systems, but are not used with In-Sight Micro or In-Sight 7000 series vision systems.

[2] HS COMMON is not used for high-speed outputs with In-Sight 5000 series vision systems. The return must use 24V Common.

[3] HS COMMON is only used with In-Sight Micro vision systems.

Terminal Block Assignments

The signal assignments for each screw terminal on the I/O module's terminal blocks are detailed in the table below. Recommended wiring is 16 - 22 AWG, solid or stranded wire.

CAUTION:

- The maximum torque that can be applied to the terminal block connectors is 0.1921 Nm (1.7 in-lb). Applying torque above this limit can damage the connectors.
- When you connect the In-Sight 7000 series vision system to the CIO-MICRO or CIO-MICRO-CC I/O module, the product does not support the following I/O module terminals: TRIGGER+, TRIGGER-, HSOUT 0, HSOUT 1 and HS COMMON. Do not connect wire leads from remote devices to these terminals.

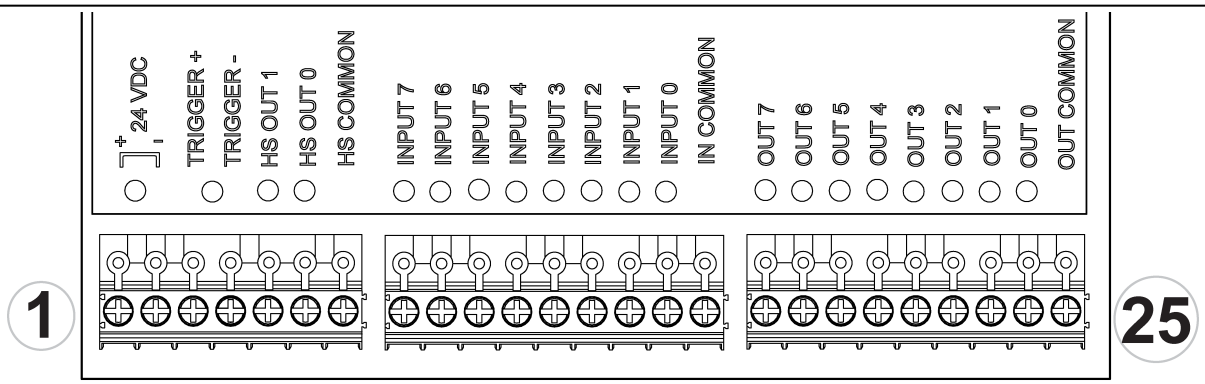

Pin#	Signal Name
1	+24VDC
2	24V Common
3	TRIGGER +
4	TRIGGER -
5	HS OUT 1
6	HS OUT 0
7	HS COMMON
8	INPUT 7
9	INPUT 6
10	INPUT 5
11	INPUT 4
12	INPUT 3
13	INPUT 2
14	INPUT 1
15	INPUT 0
16	IN COMMON
17	OUT 7
18	OUT 6
19	OUT 5
20	OUT 4
21	OUT 3

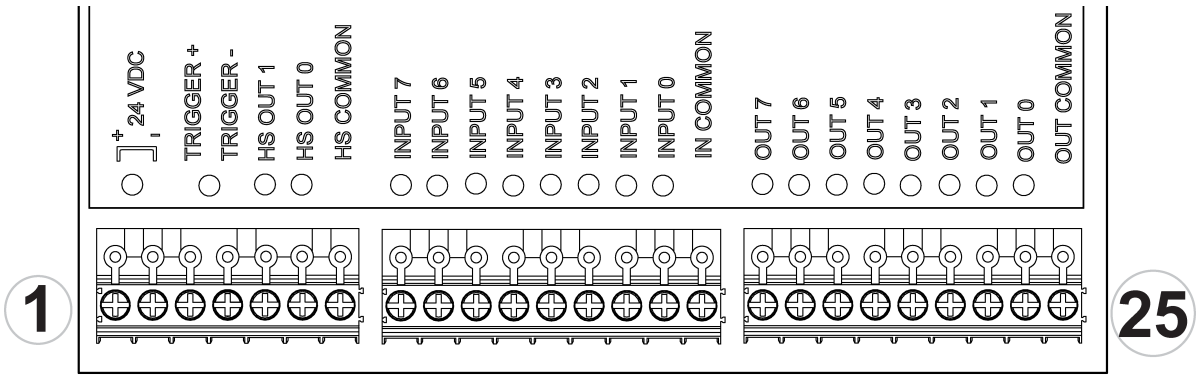

Pin#	Signal Name
22	OUT 2
23	OUT 1
24	OUT 0
25	OUT COMMON

CC-Link Terminal Block Assignments

Note: The CC-Link terminals are only available on the CIO-MICRO-CC I/O module.

The CC-Link terminal block connectors conform to the CC-Link specifications. Refer to the CC-Link web site for more information and specification details. Recommended wiring is 16 - 22 AWG, solid or stranded wire.

CAUTION: The maximum torque that can be applied to the terminal block connectors is 0.1921 Nm (1.7 in-lb). Applying torque above this limit can damage the connectors.

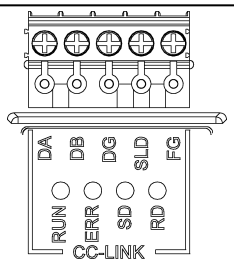

Pin Label	Signal Name	LED	Indicates
DA	Communication Data	RUN	Normal
DB	Communication Data	ERR	Error
DG	Ground	SD	Send
SLD	Shield	RD	Receive
FG	Earth		

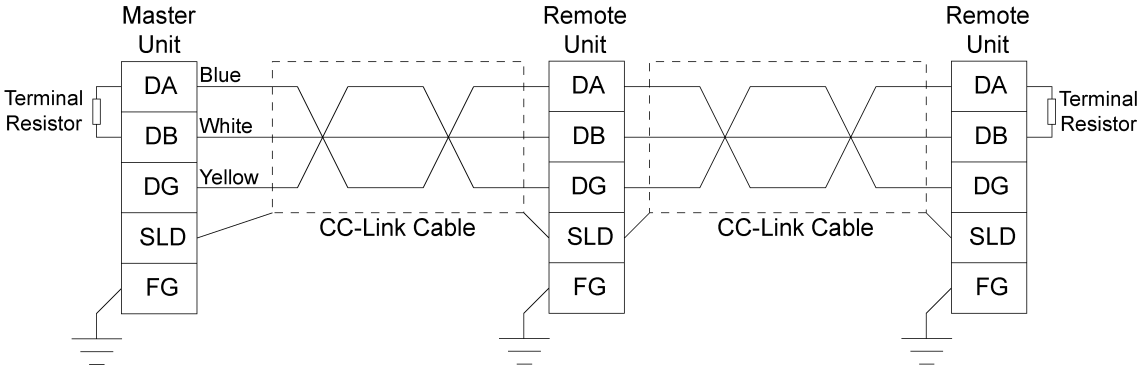

Dimensional Drawings

Note:

- Dimensions are in millimeters [inches] and are for reference purposes only.
- All specifications are for reference purposes only and can change without notice.

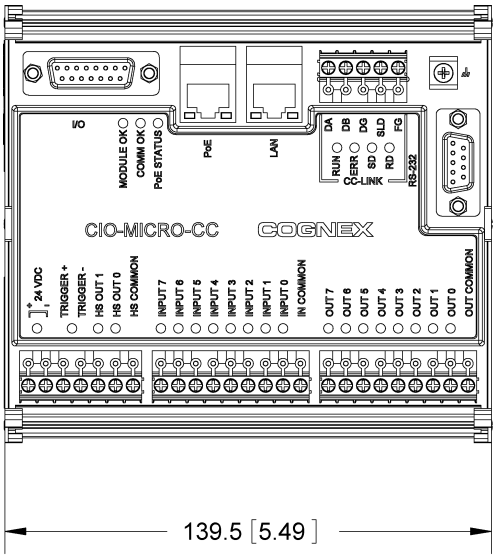

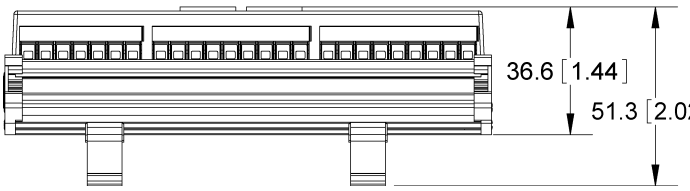

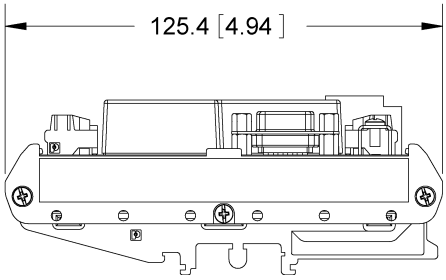

Wiring Inputs and Outputs

The following figures show basic wiring for some of the more common CIO-MICRO and CIO-MICRO-CC I/O module configurations.

Note:

- The CIO-MICRO and CIO-MICRO-CC I/O modules function the same in all examples, with the exception of the CC-Link examples, which are limited to the CIO-MICRO-CC I/O module.
- The I/O module requires a 24VDC power connection to the 24VDC + and – power terminals.
- The I/O module passes power to a properly connected In-Sight Micro or In-Sight 5000 series vision system. However, the I/O module cannot be used to supply power to the In-Sight 7000 series vision system. The In-Sight 7000 series vision system's Power and I/O Breakout cable must be used to supply power to the vision system.
- OUT COMMON is only for general-purpose outputs, not high-speed outputs.
- In-Sight Micro vision system high-speed outputs use HS COMMON for power with PNP or ground with NPN.
- HS COMMON is not used for high-speed outputs with In-Sight 5000 series vision systems. The return must use 24V Common.
- The I/O module does not provide access to the In-Sight 7000 series vision system's high-speed outputs. The In-Sight 7000 series vision system's high-speed outputs are accessible from only the vision system Breakout cable.
- To maintain optical isolation of the I/O lines, the devices connected to these lines must not be connected to the same power supply as the I/O module. If they are connected to, or share a ground with, the same power supply, they may still function but will no longer be optically isolated.
- Do not connect a relay to an input configured as a Job Load Switch. A signal from a relay fluctuates enough (from contact bounce) that multiple job loads are recognized.

CAUTION:

- The shield ground connections of the RS-232 port, LAN port, PoE port, I/O port and Frame Ground terminal are internally connected. The system grounding is at a zero ground potential. This zero-ground potential extends through the cable and to peripheral equipment, such as a vision system or PLC. To ensure safe operating conditions, check ground connections to ensure that they meet a zero ground potential.
- All general-purpose inputs share a common connection (IN COMMON). Therefore, all input devices must be the same; either current sinking or current sourcing. Mixing inputs with sinking and sourcing could damage the I/O module or your devices.
- All general-purpose outputs share a common connection (OUT COMMON). Therefore, all output devices must be the same; either current sinking or current sourcing. Mixing outputs with sinking and sourcing could damage the I/O module or your devices.
- When you connect the In-Sight 7000 series vision system to the CIO-MICRO or CIO-MICRO-CC I/O module, the product does not support the following I/O module terminals: TRIGGER+, TRIGGER-, HSOUT 0, HSOUT 1 and HS COMMON. Do not connect wire leads from remote devices to these terminals.
- When you connect the In-Sight 7000 series vision system to the CIO-MICRO or CIO-MICRO-CC I/O module, the I/O module's I/O port (DB15) is not supported. Do not connect anything to this port.
- Ensure that the cable bend radius begins at least six inches from the connector. Cable shielding can be degraded or cables can be damaged or wear out faster if a service loop or bend radius is tighter than 10X the cable diameter.

Trigger from Photoelectric Sensor or PLC

In-Sight Micro and 5000 Series: Photoelectric Sensor or PLC Sinks Current

The In-Sight Micro or In-Sight 5000 series vision system's trigger input is energized by a 24VDC control signal from a photoelectric sensor or a PLC.

Note: The vision system must be Online for the discrete inputs and outputs to function.

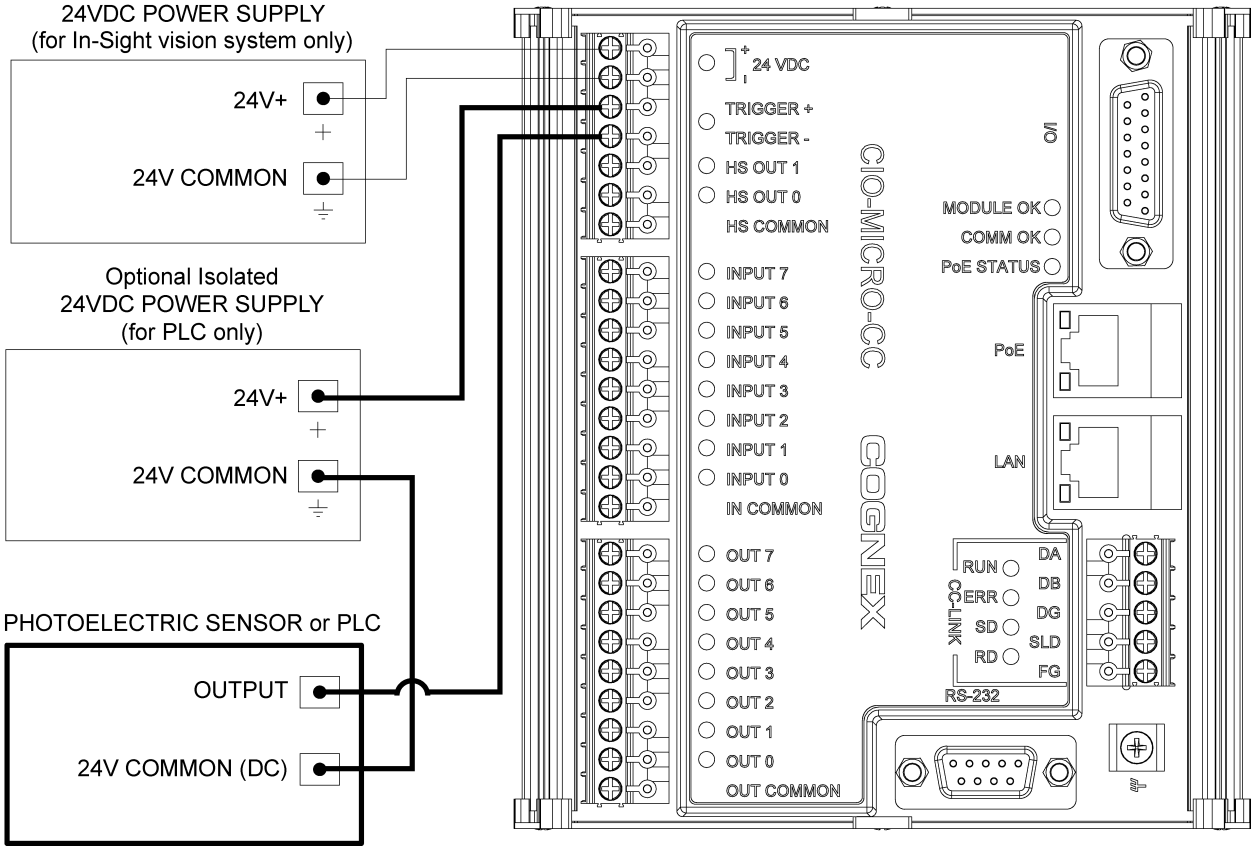

In-Sight Micro and 5000 Series: Photoelectric Sensor or PLC Sources Current

The In-Sight Micro or In-Sight 5000 series vision system's trigger input is energized by a 24VDC control signal from a photoelectric sensor or a PLC.

Note: The vision system must be Online for the discrete inputs and outputs to function.

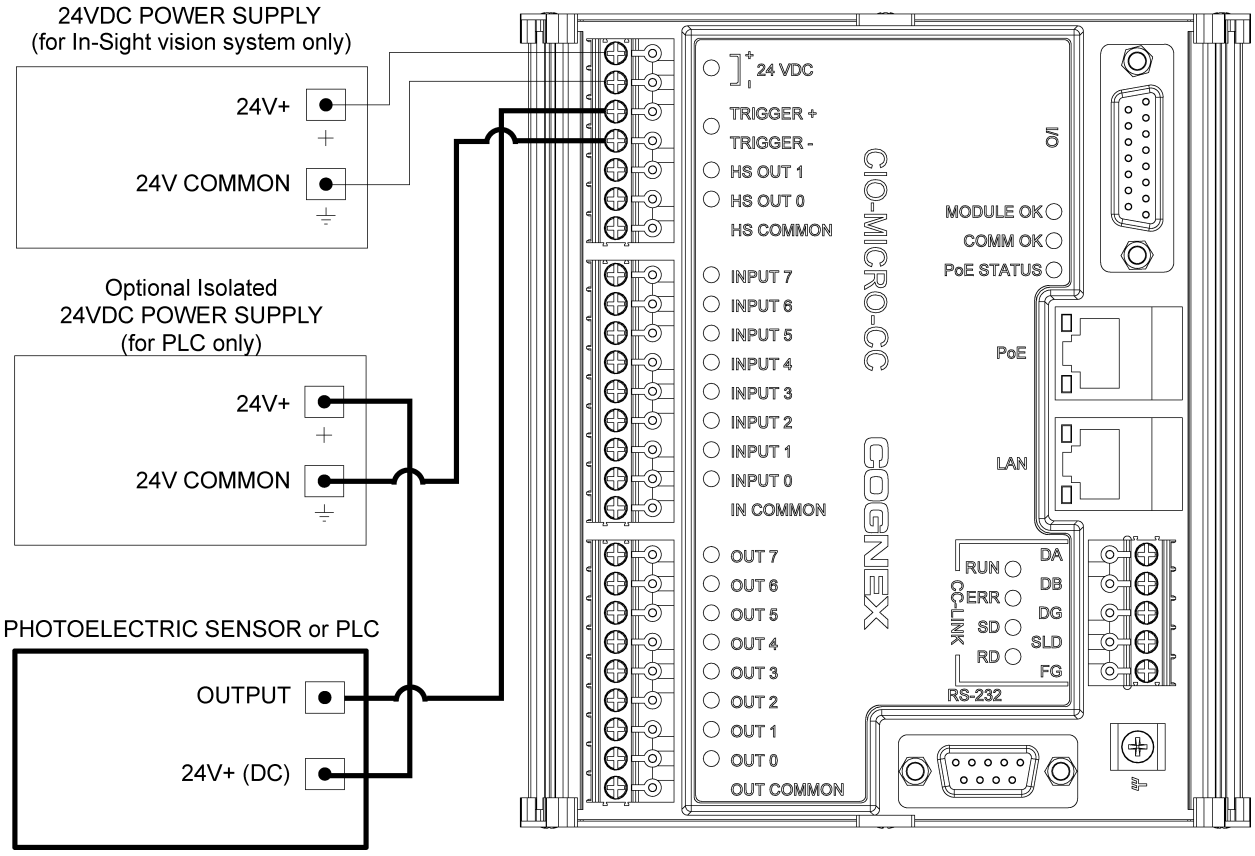

Input from PLC

In-Sight Micro and 5000 Series: PLC Sinks Current

The In-Sight Micro or In-Sight 5000 series vision system's I/O input is energized by a 24VDC control signal from a PLC.

Note: The vision system must be Online for the discrete inputs and outputs to function.

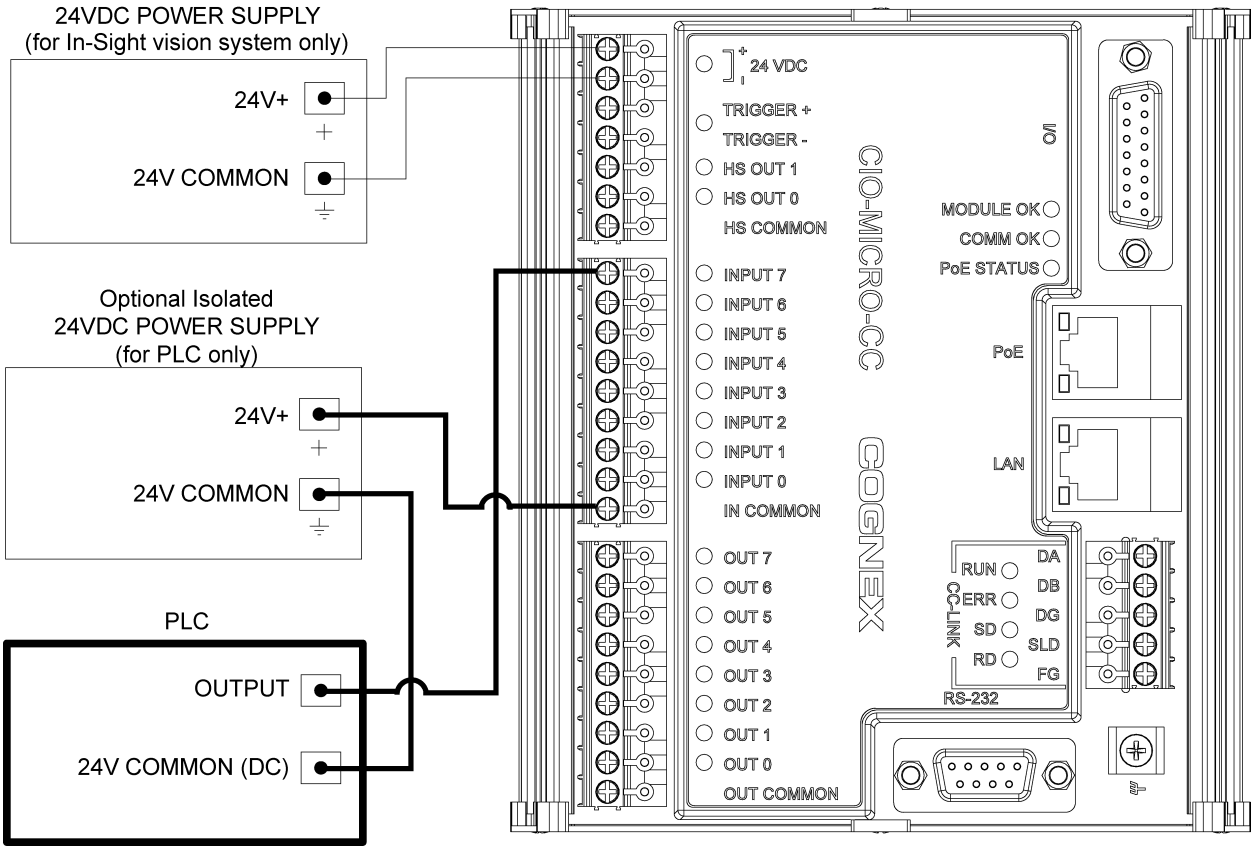

In-Sight Micro and 5000 Series: PLC Sources Current

The In-Sight Micro or In-Sight 5000 series vision system's I/O input is energized by a 24VDC control signal from a PLC.

Note: The vision system must be Online for the discrete inputs and outputs to function.

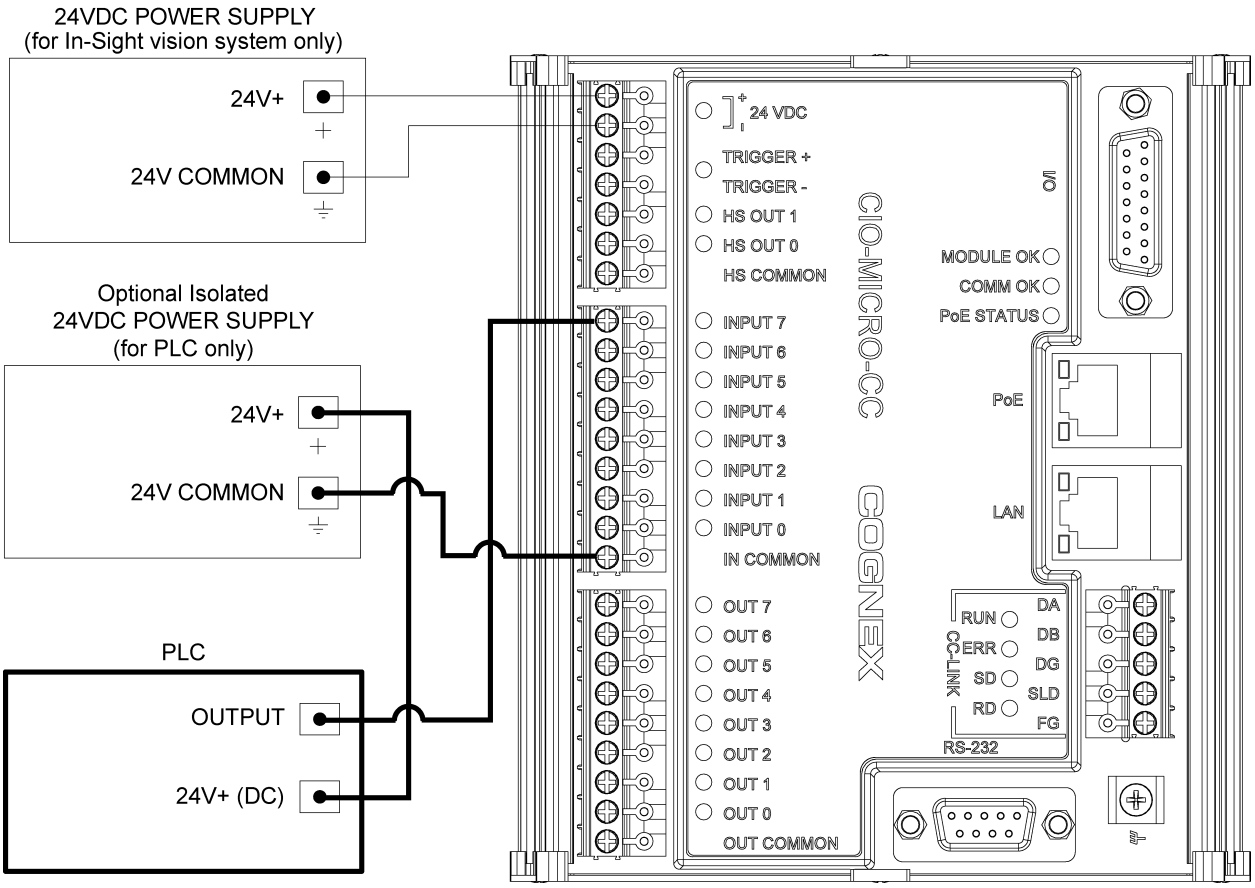

In-Sight 7000 Series: PLC Sinks Current

The In-Sight 7000 series vision system's I/O input is energized by a 24VDC control signal from a PLC.

Note:

- The power supplies for the vision system and I/O module can be combined into a single power supply, provided the single power supply meets the capacity requirements of the two devices.
- The vision system must be Online for the discrete inputs and outputs to function.

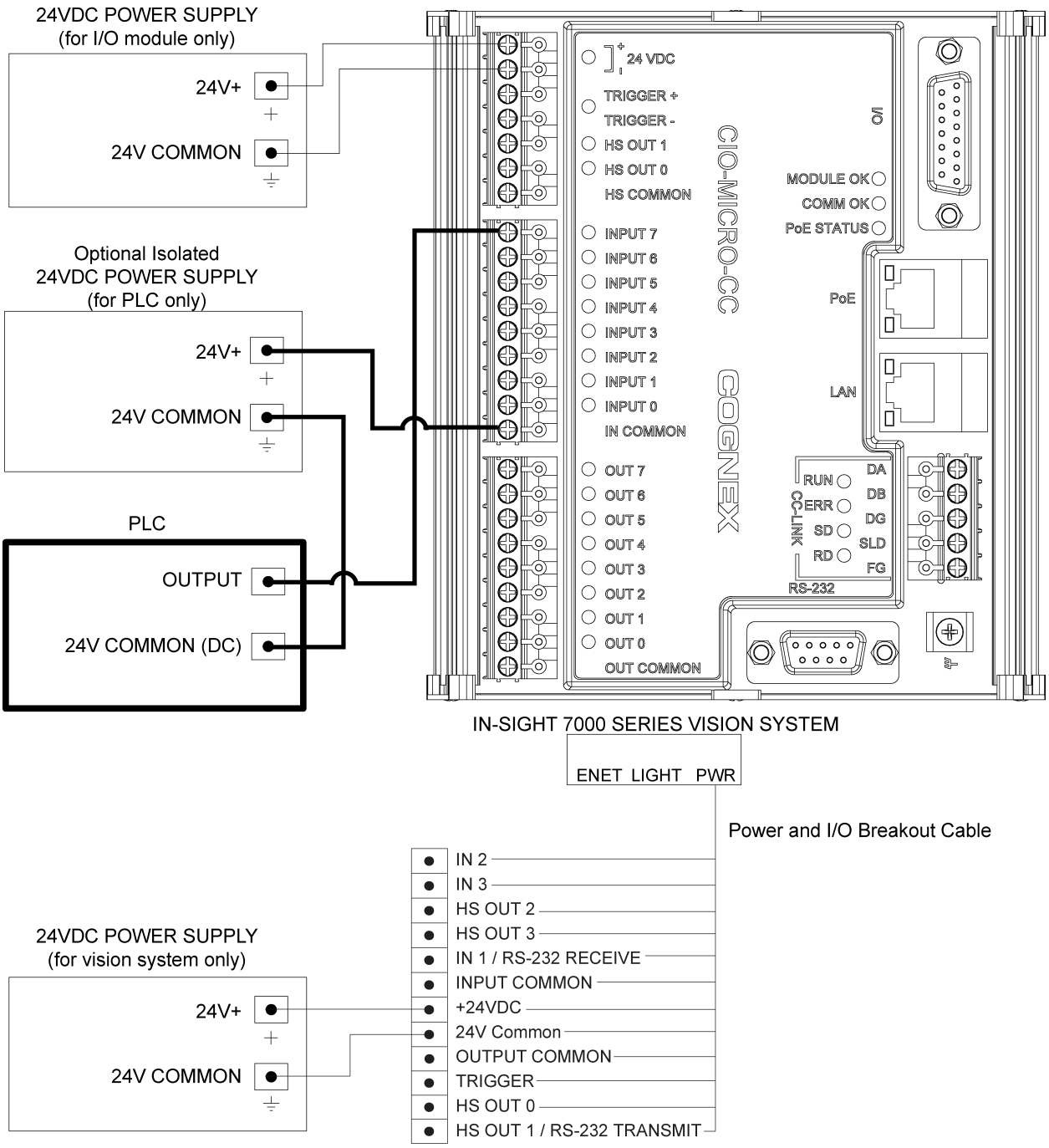

In-Sight 7000 Series: PLC Sources Current

The In-Sight 7000 series vision system's I/O input is energized by a 24VDC control signal from a PLC.

Note:

- The power supplies for the vision system and I/O module can be combined into a single power supply, provided the single power supply meets the capacity requirements of the two devices.
- The vision system must be Online for the discrete inputs and outputs to function.

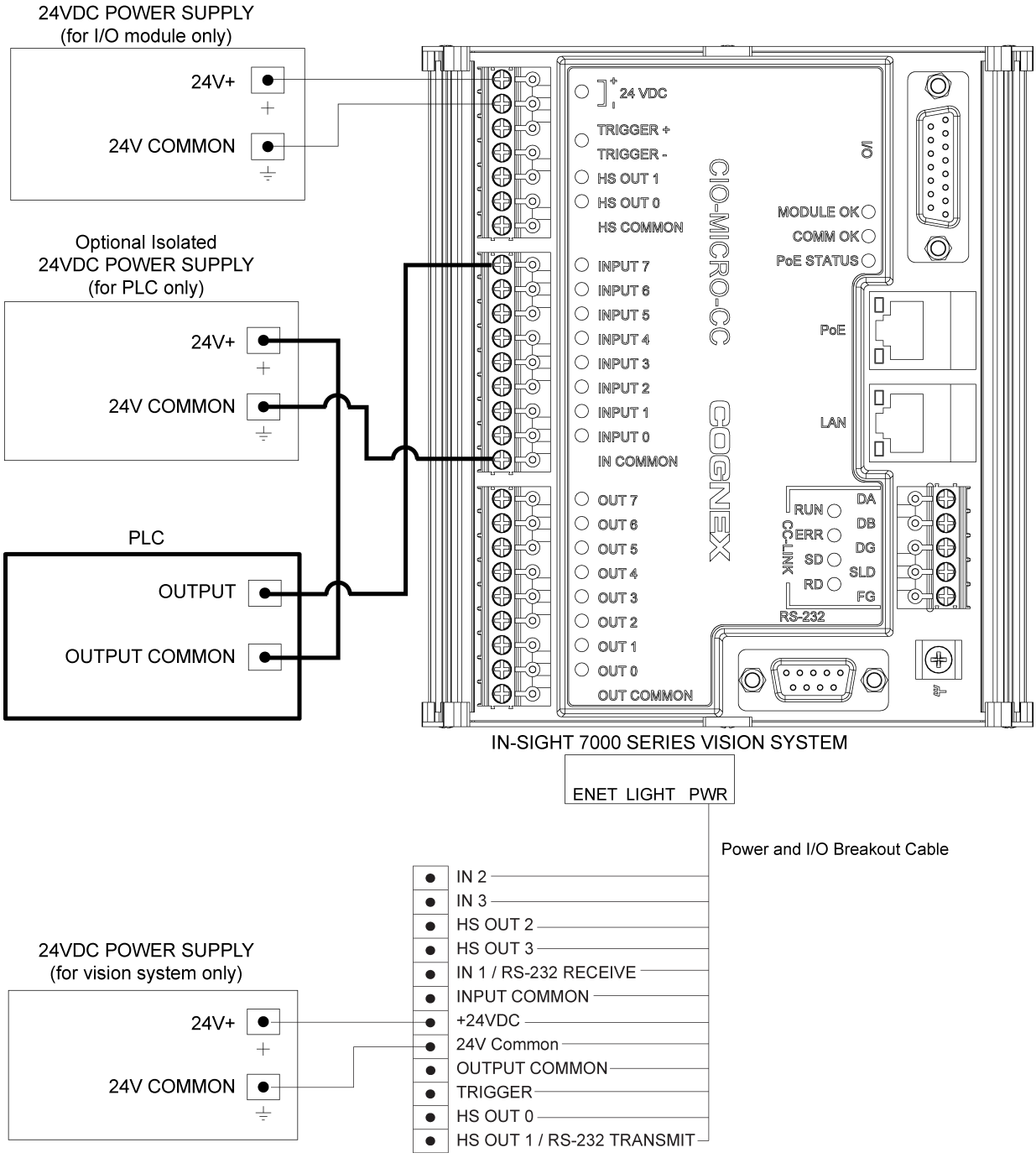

Output to PLC

In-Sight Micro and 5000 Series: I/O Module Sinks Current

The PLC input is energized by a 24VDC control signal switched by the I/O module.

Note: The vision system must be Online for the discrete inputs and outputs to function.

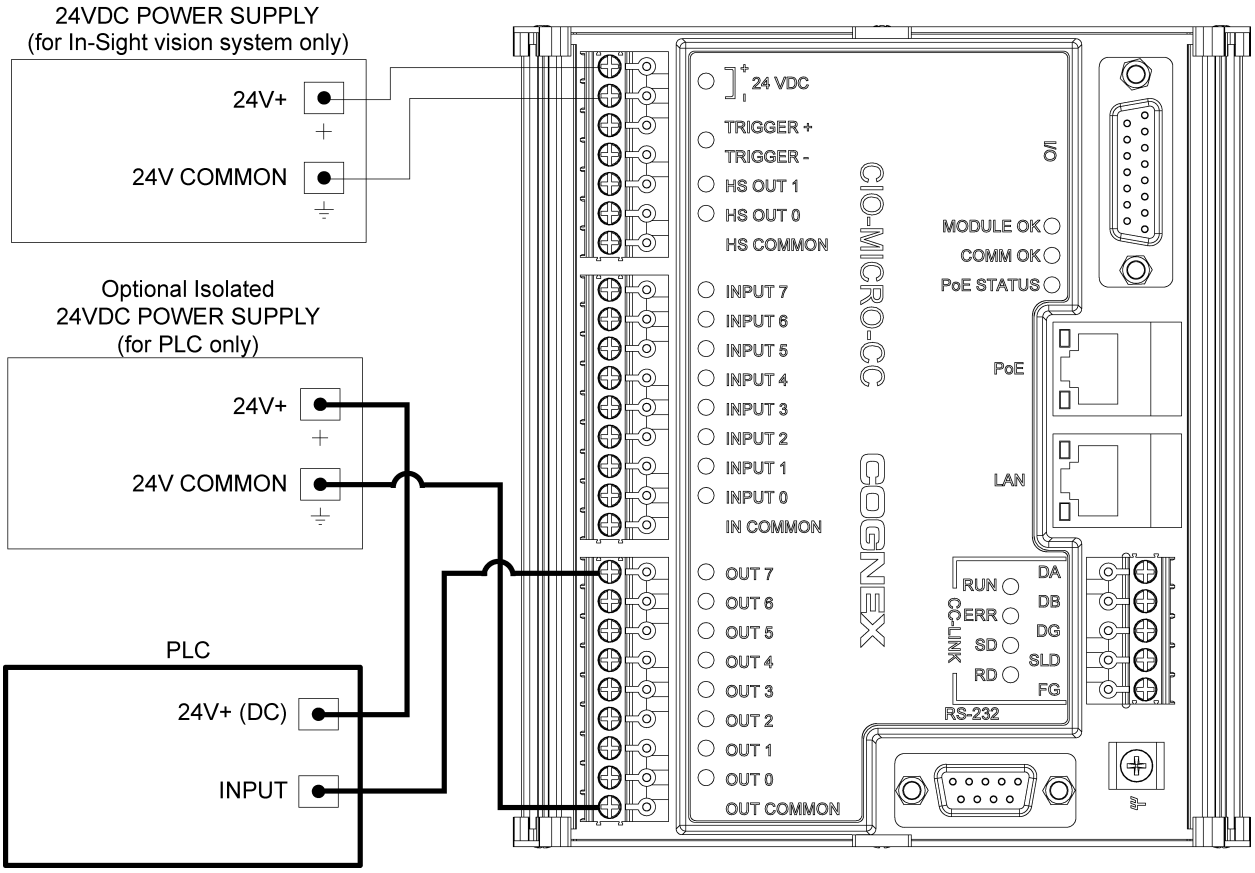

In-Sight Micro and 5000 Series: I/O Module Sources Current

The PLC input is energized by a 24VDC control signal switched by the I/O module.

Note: The vision system must be Online for the discrete inputs and outputs to function.

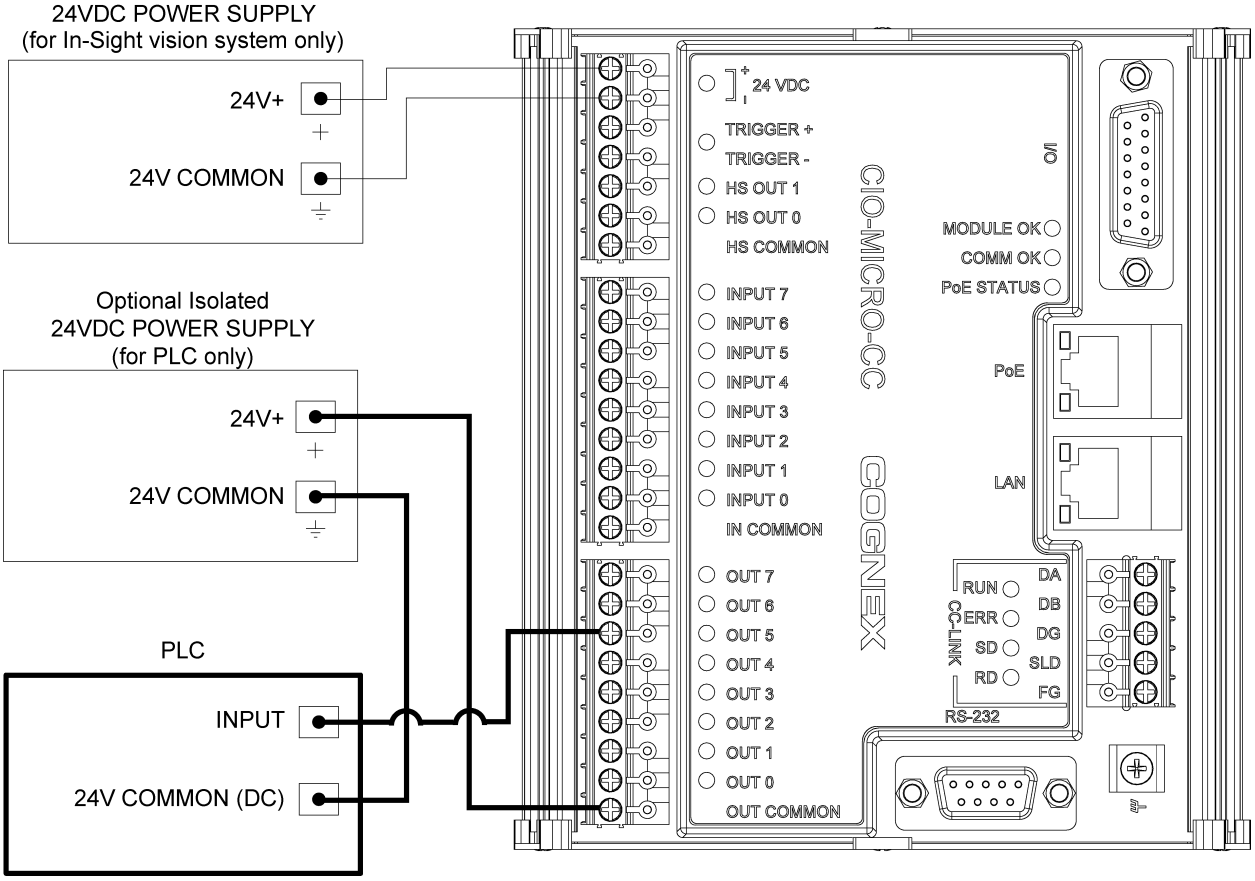

In-Sight 7000 Series: I/O Module Sinks Current

The PLC input is energized by a 24VDC control signal switched by the I/O module.

Note:

- The power supplies for the vision system and I/O module can be combined into a single power supply, provided the single power supply meets the capacity requirements of the two devices.
- The vision system must be Online for the discrete inputs and outputs to function.

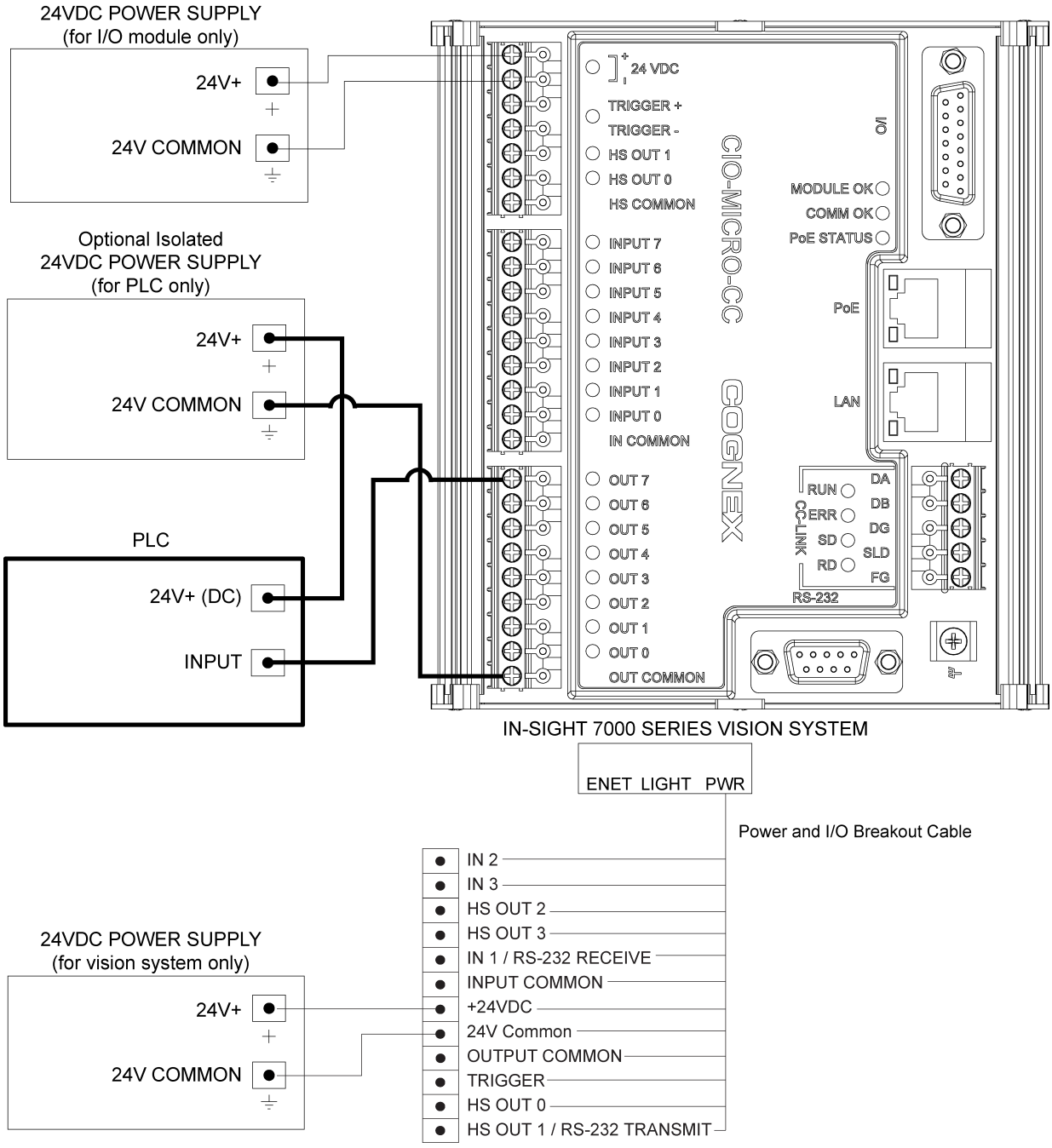

In-Sight 7000 Series: I/O Module Sources Current

The PLC input is energized by a 24VDC control signal switched by the I/O module.

Note:

- The power supplies for the vision system and I/O module can be combined into a single power supply, provided the single power supply meets the capacity requirements of the two devices.
- The vision system must be Online for the discrete inputs and outputs to function.

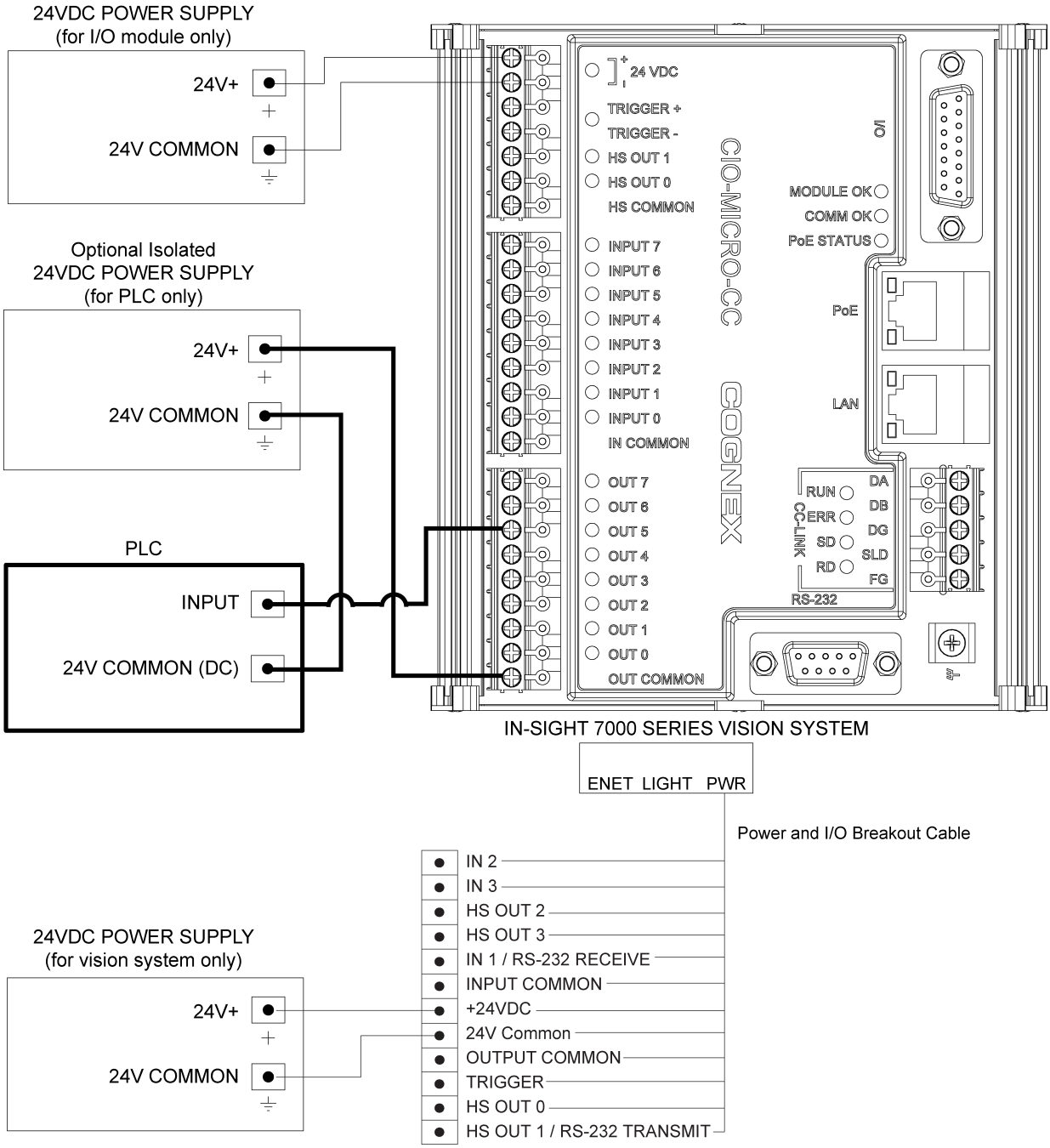

Output to Pilot Light or Relay

In-Sight Micro and 5000 Series: I/O Module Sinks Current

The pilot light or relay is energized by a 24VDC control signal switched by the I/O module.

Note: The vision system must be Online for the discrete inputs and outputs to function.

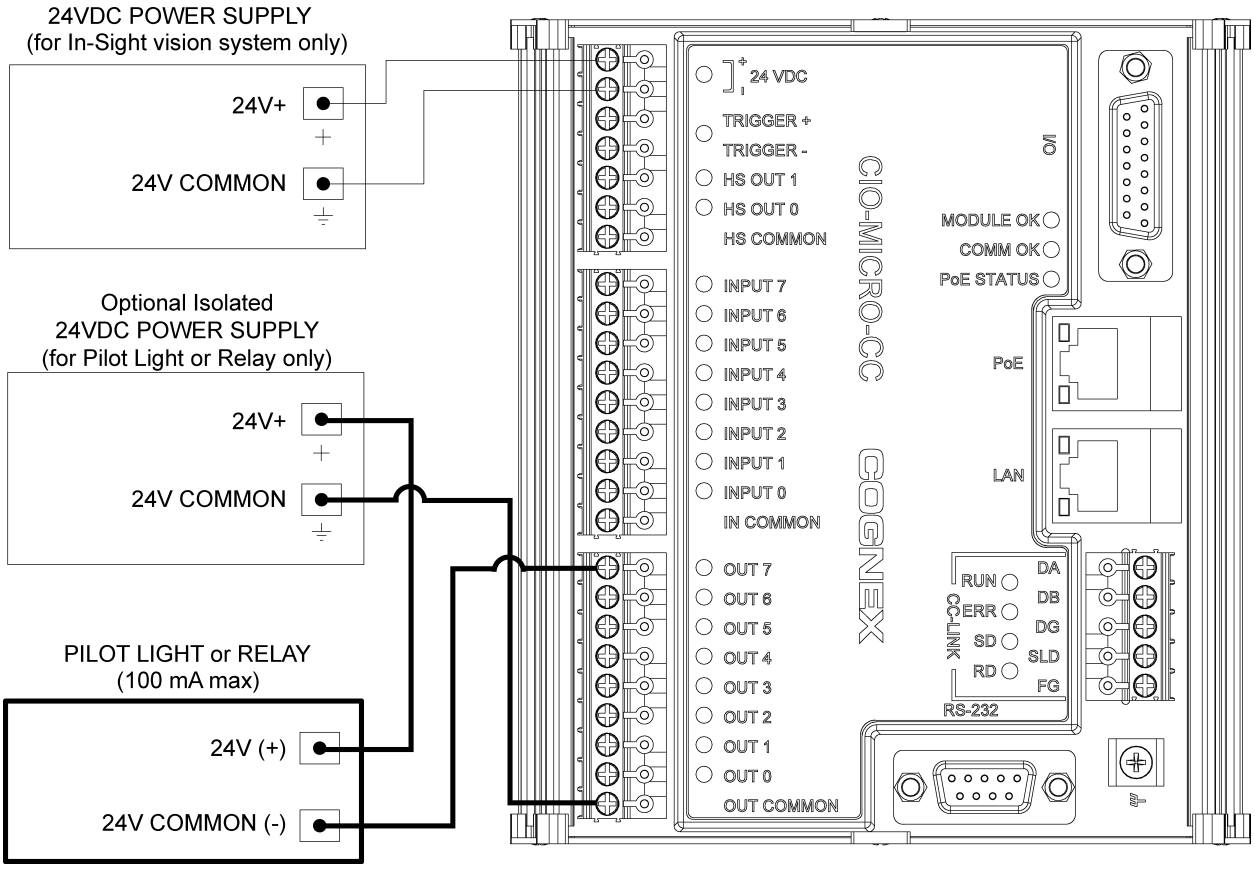

In-Sight Micro and 5000 Series: I/O Module Sources Current

The pilot light or relay is energized by a 24VDC control signal switched by the I/O module.

Note: The vision system must be Online for the discrete inputs and outputs to function.

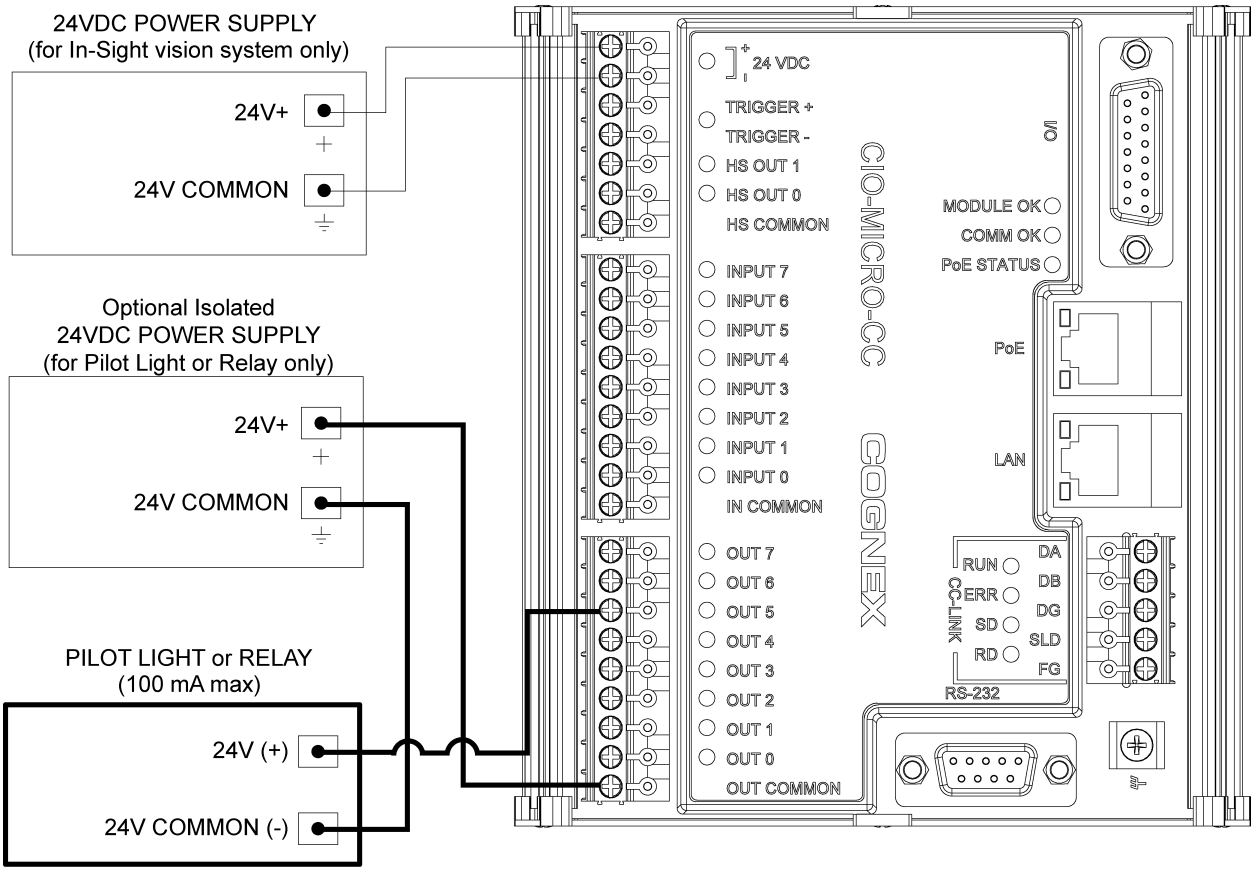

In-Sight 7000 Series: I/O Module Sinks Current

The pilot light or relay is energized by a 24VDC control signal switched by the I/O module.

Note:

- The power supplies for the vision system and I/O module can be combined into a single power supply, provided the single power supply meets the capacity requirements of the two devices.
- The vision system must be Online for the discrete inputs and outputs to function.

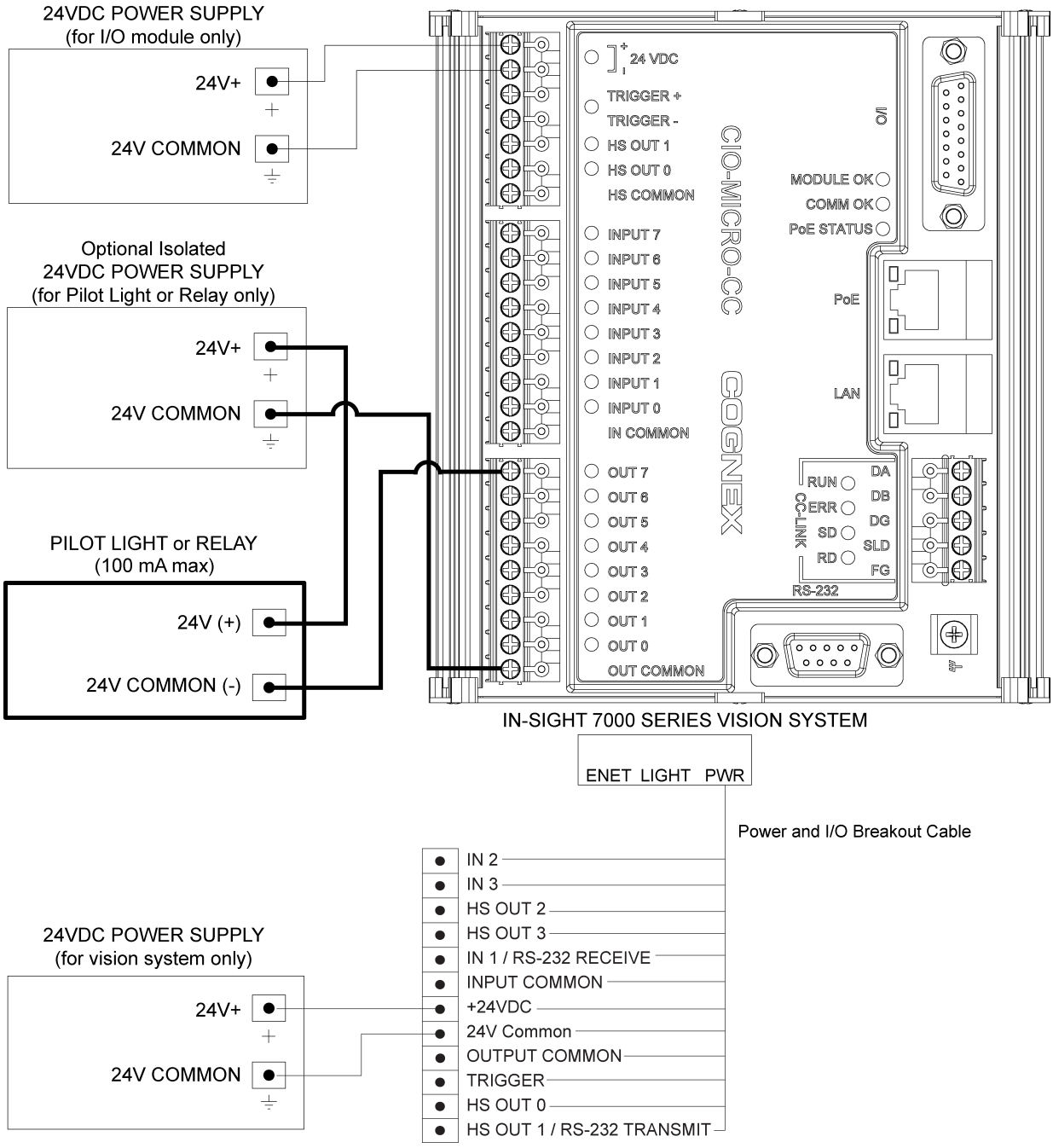

In-Sight 7000 Series: I/O Module Sources Current

The pilot light or relay is energized by a 24VDC control signal switched by the I/O module.

Note:

- The power supplies for the vision system and I/O module can be combined into a single power supply, provided the single power supply meets the capacity requirements of the two devices.
- The vision system must be Online for the discrete inputs and outputs to function.

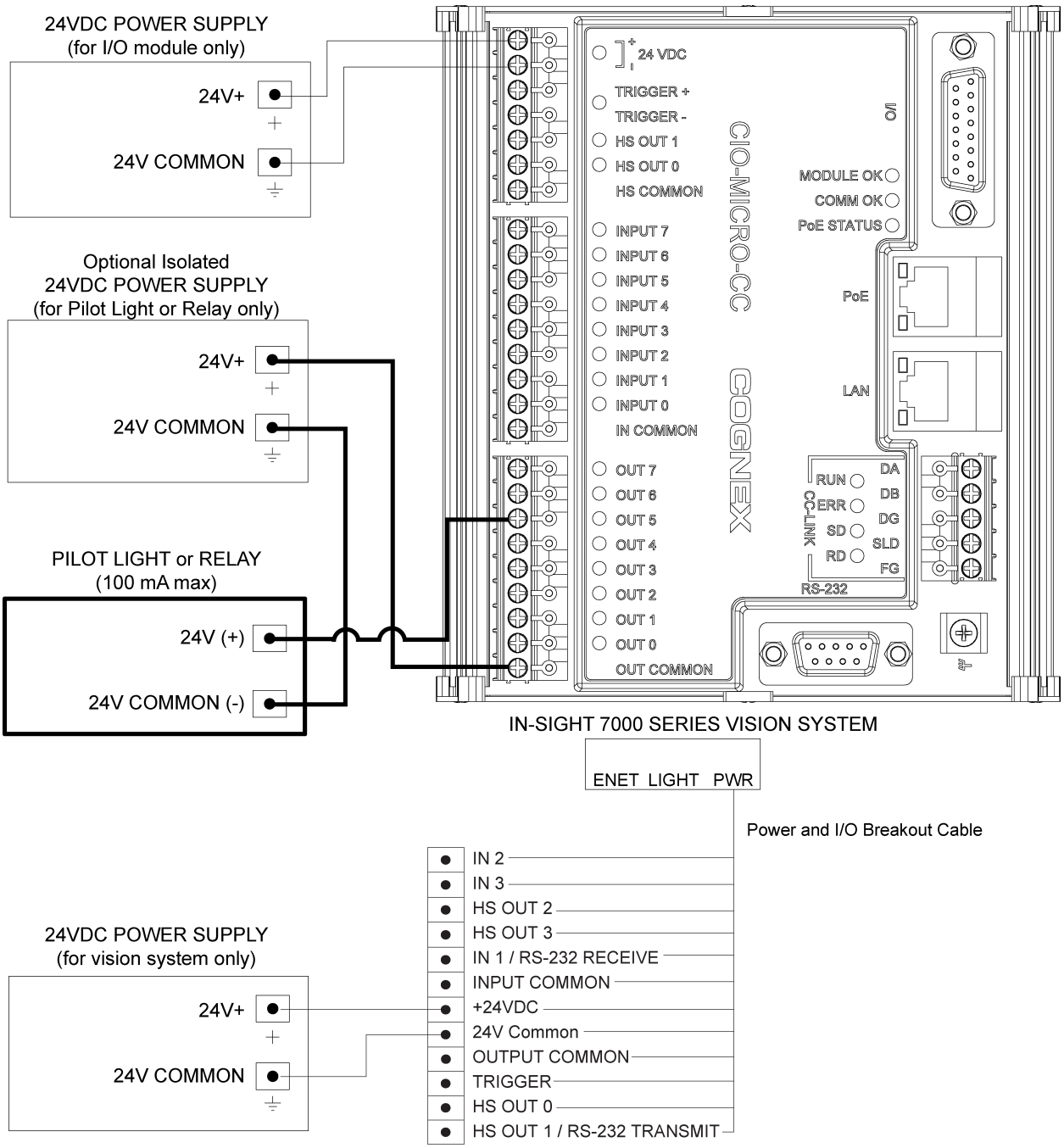

High-Speed Output to Strobe Controller

In-Sight Micro Series: I/O Module Sinks Current

Note:

- The In-Sight Micro vision system supports high-speed strobe output only on HS OUT 1.
- A resistor may be required to reduce voltage, to meet strobe controller electrical requirements.
- The vision system must be Online for the discrete inputs and outputs to function.

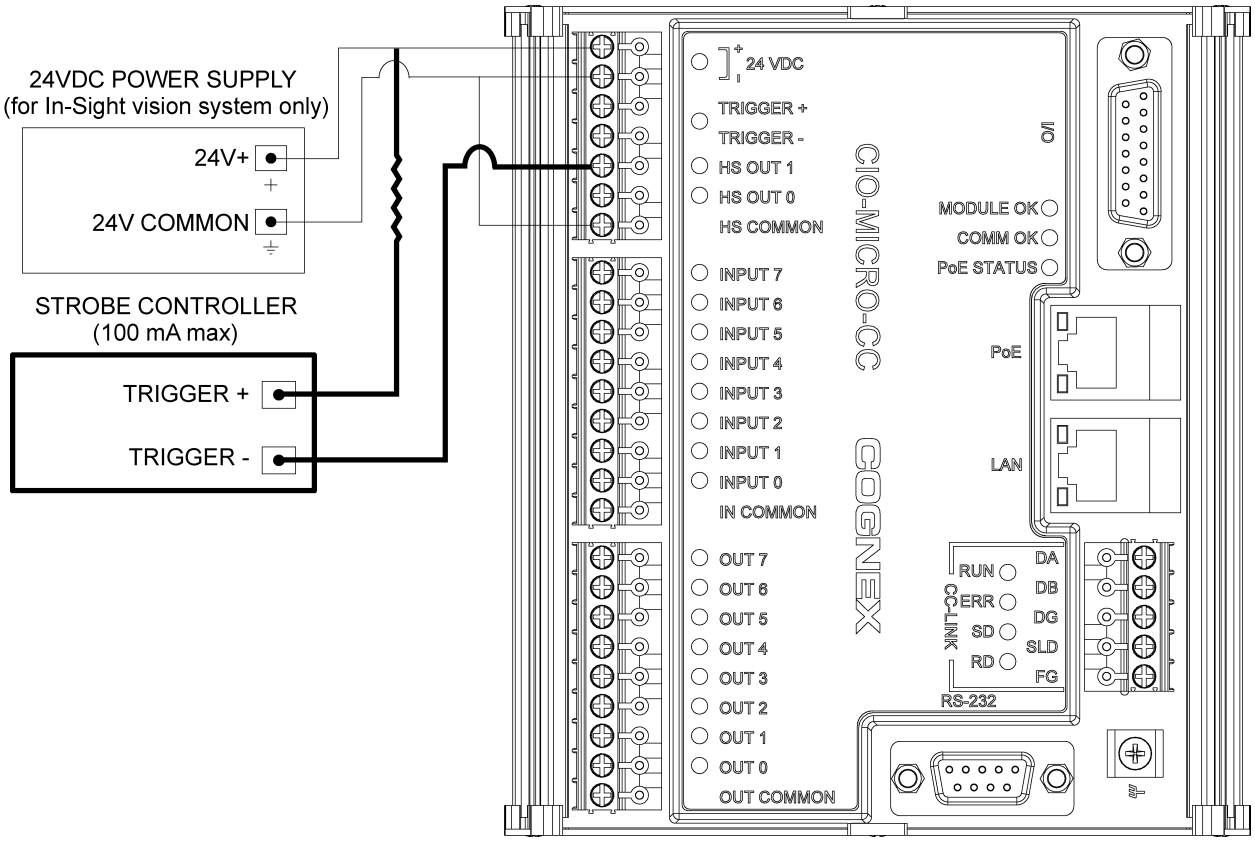

In-Sight Micro Series: I/O Module Sinks Current (Optically Isolated High-Speed Output)

The In-Sight Micro vision system's high-speed outputs are capable of optical isolation by powering the strobe controller from a separate, isolated power supply.

Note:

- The In-Sight Micro vision system supports high-speed strobe output only on HS OUT 1.
- A resistor may be required to reduce voltage, to meet strobe controller electrical requirements.
- The vision system must be Online for the discrete inputs and outputs to function.

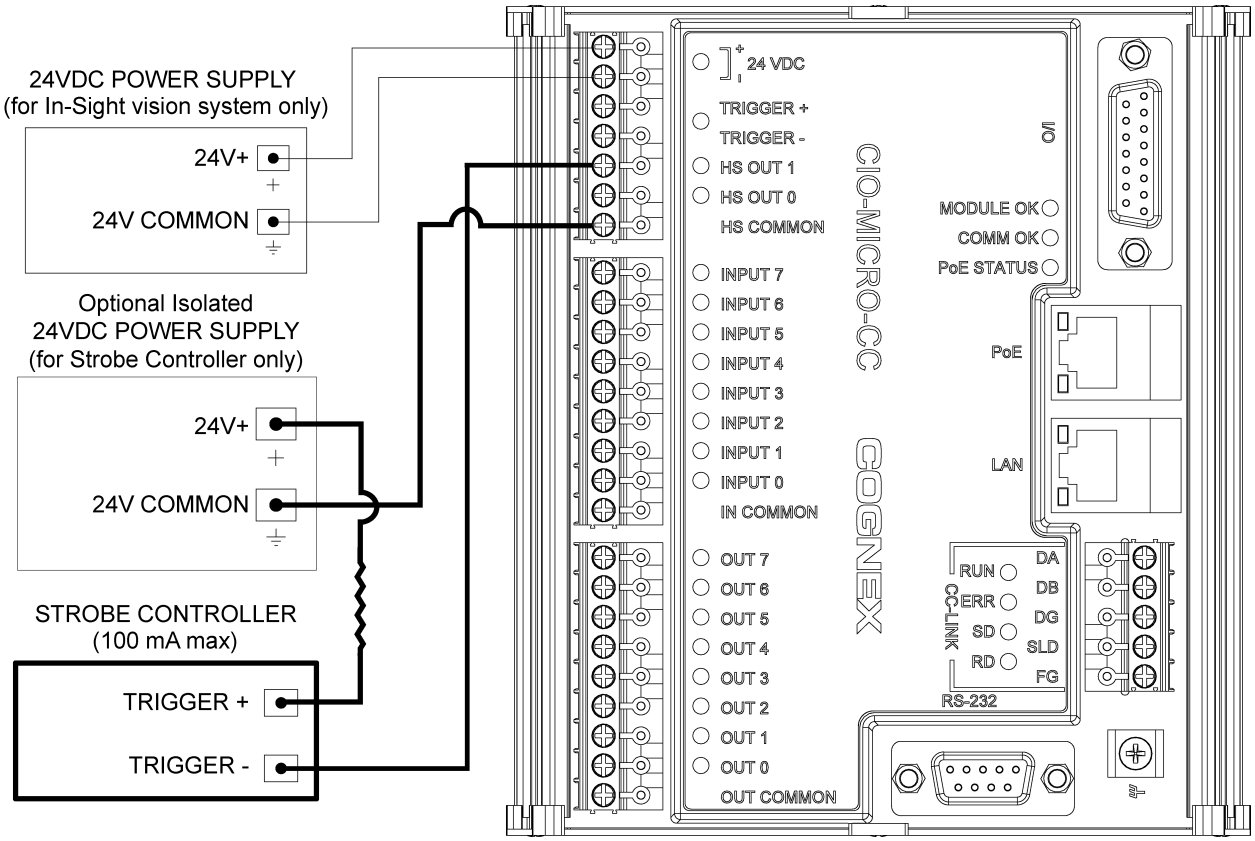

In-Sight Micro Series: I/O Module Sources Current

Note:

- The In-Sight Micro vision system supports high-speed strobe output only on HS OUT 1.
- A resistor may be required to reduce voltage, to meet strobe controller electrical requirements.
- The vision system must be Online for the discrete inputs and outputs to function.

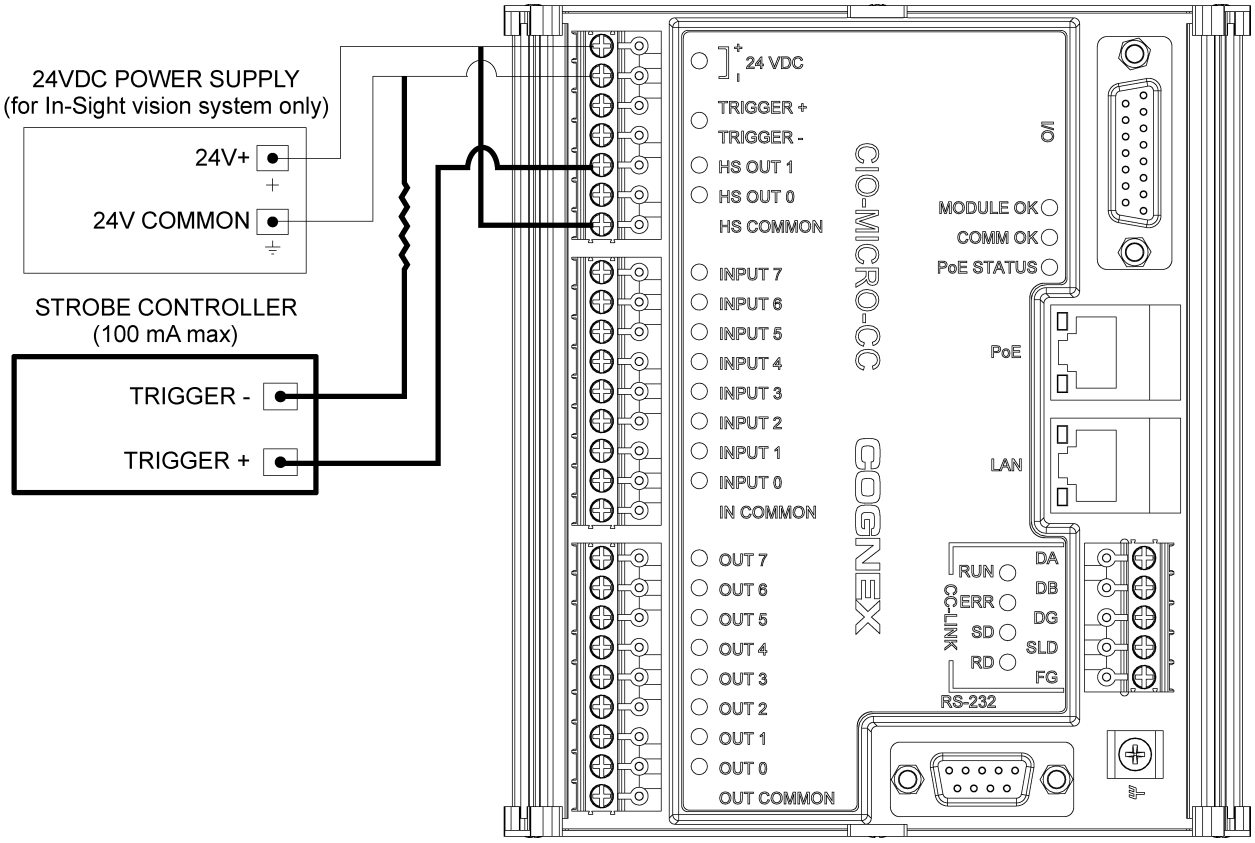

In-Sight Micro Series: I/O Module Sources Current (Optically Isolated High-Speed Output)

The In-Sight Micro vision system's high-speed outputs are capable of optical isolation by powering the strobe controller from a separate, isolated power supply.

Note:

- The In-Sight Micro vision system supports high-speed strobe output only on HS OUT 1.
- A resistor may be required to reduce voltage, to meet strobe controller electrical requirements.
- The vision system must be Online for the discrete inputs and outputs to function.

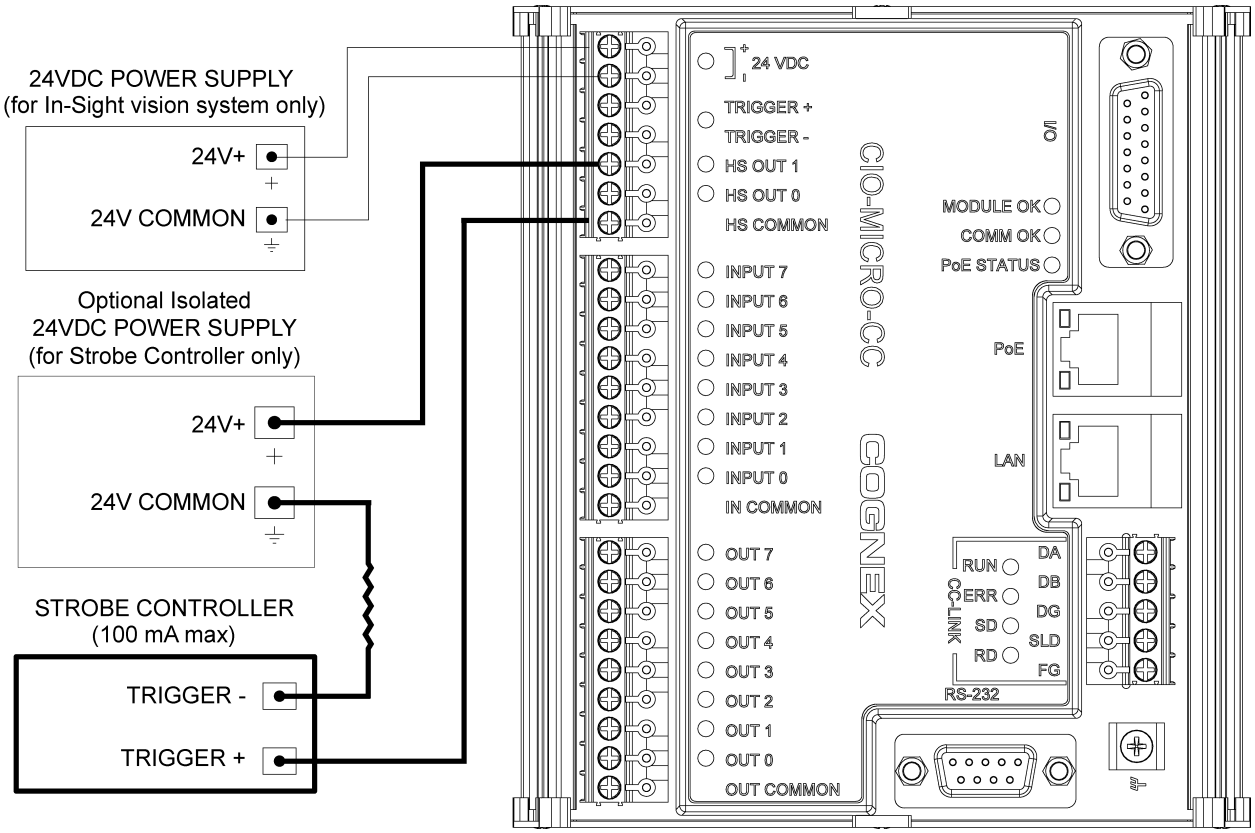

In-Sight 5000 Series: I/O Module Sinks Current

Note:

- The In-Sight 5000 series vision system supports high-speed strobe output only on HS OUT 1.
- With an In-Sight 5000 series vision system, only NPN is supported. HS COMMON is not used for high-speed outputs with In-Sight 5000 series vision systems. The return must use 24V Common.
- A resistor may be required to reduce voltage, to meet strobe controller electrical requirements.
- The vision system must be Online for the discrete inputs and outputs to function.

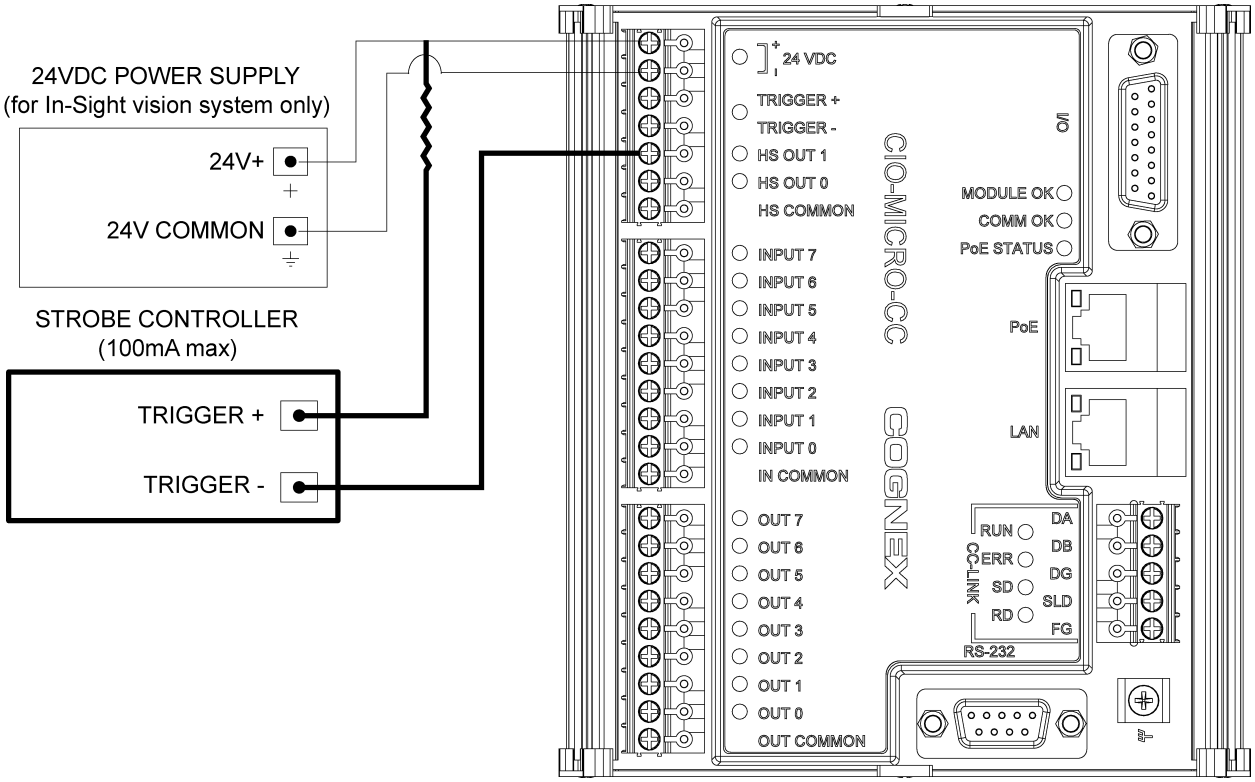

Input from 3-Wire Photoelectric Sensor

Delete this text and replace it with your own content.

In-Sight Micro and 5000 Series: Current Sourcing

The In-Sight Micro or In-Sight 5000 series vision system's trigger input is energized by a 24VDC control signal from a photoelectric sensor or a PLC.

Note: The vision system must be Online for the discrete inputs and outputs to function.

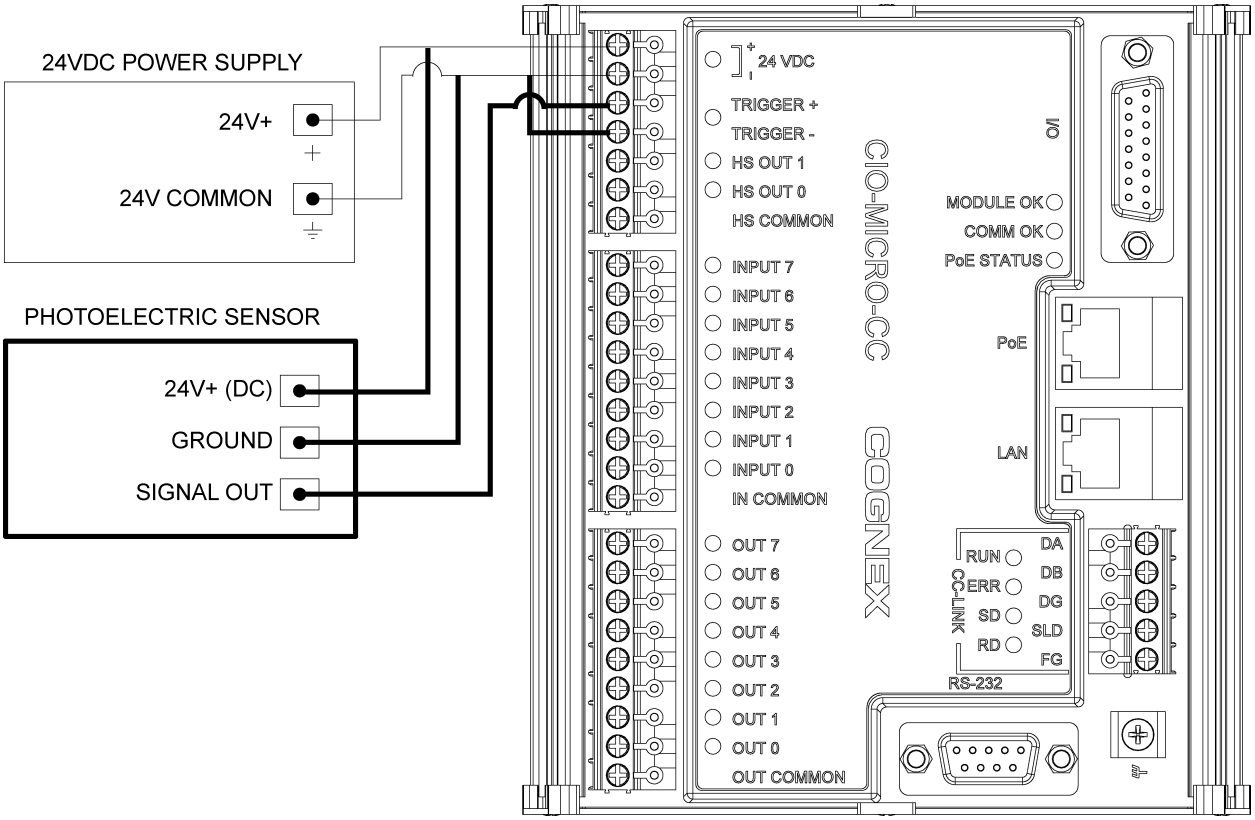

In-Sight Micro and 5000 Series: Current Sinking

The In-Sight Micro or In-Sight 5000 series vision system's trigger input is energized by a 24VDC control signal from a photoelectric sensor or a PLC.

Note: The vision system must be Online for the discrete inputs and outputs to function.

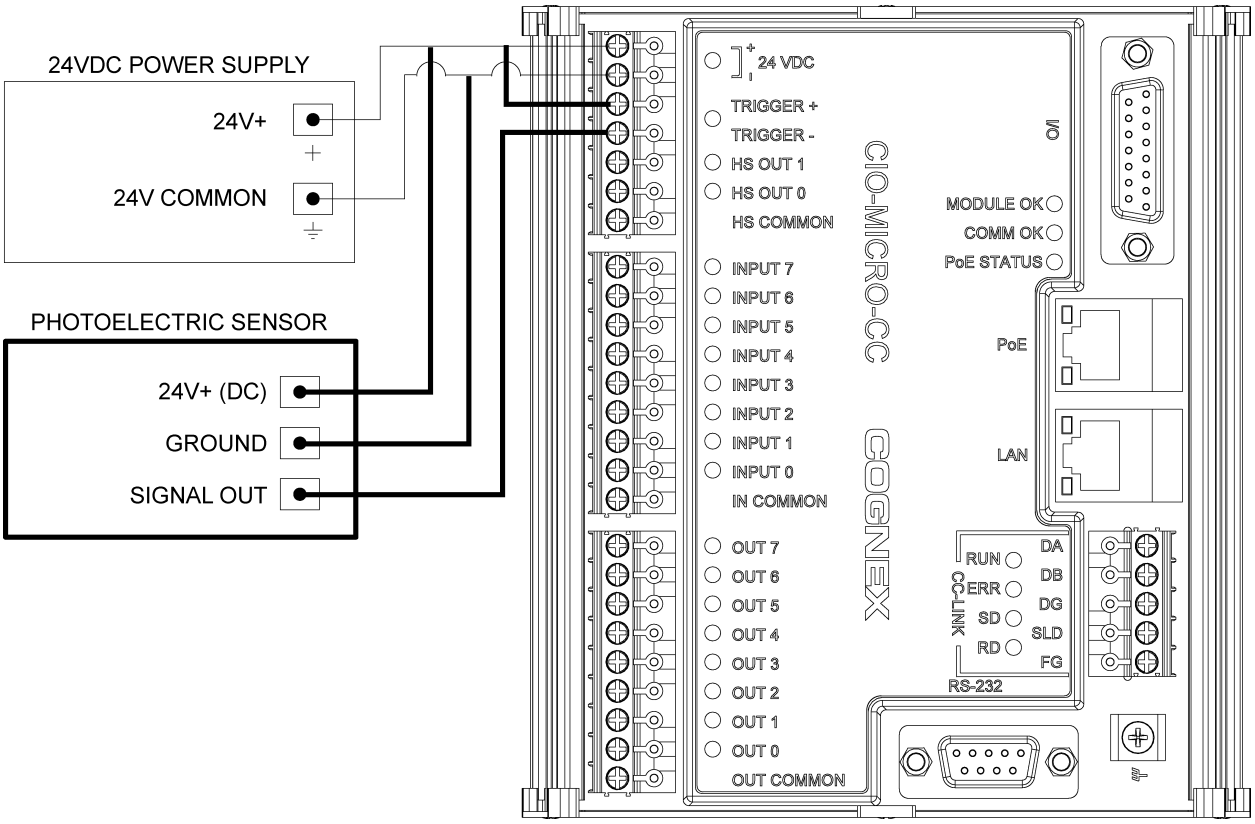

CIO-MICRO-CC CC-Link Connections

Delete this text and replace it with your own content.

CC-Link Connection: Endpoint Configuration

The CIO-MICRO-CC is connected to a CC-Link network.

Note:

- To reduce emissions, attach a Steward 28A0640-0A2 ferrite around the CC-Link wire bundle as close to the connector as possible.
- The CC-Link network is daisy-chained and requires a terminal resistor for the first and last devices in the chain. Make certain that your connections are correct. Refer to the CC-Link website for more information and specification details.
- The vision system must be Online for CC-link communications to function.

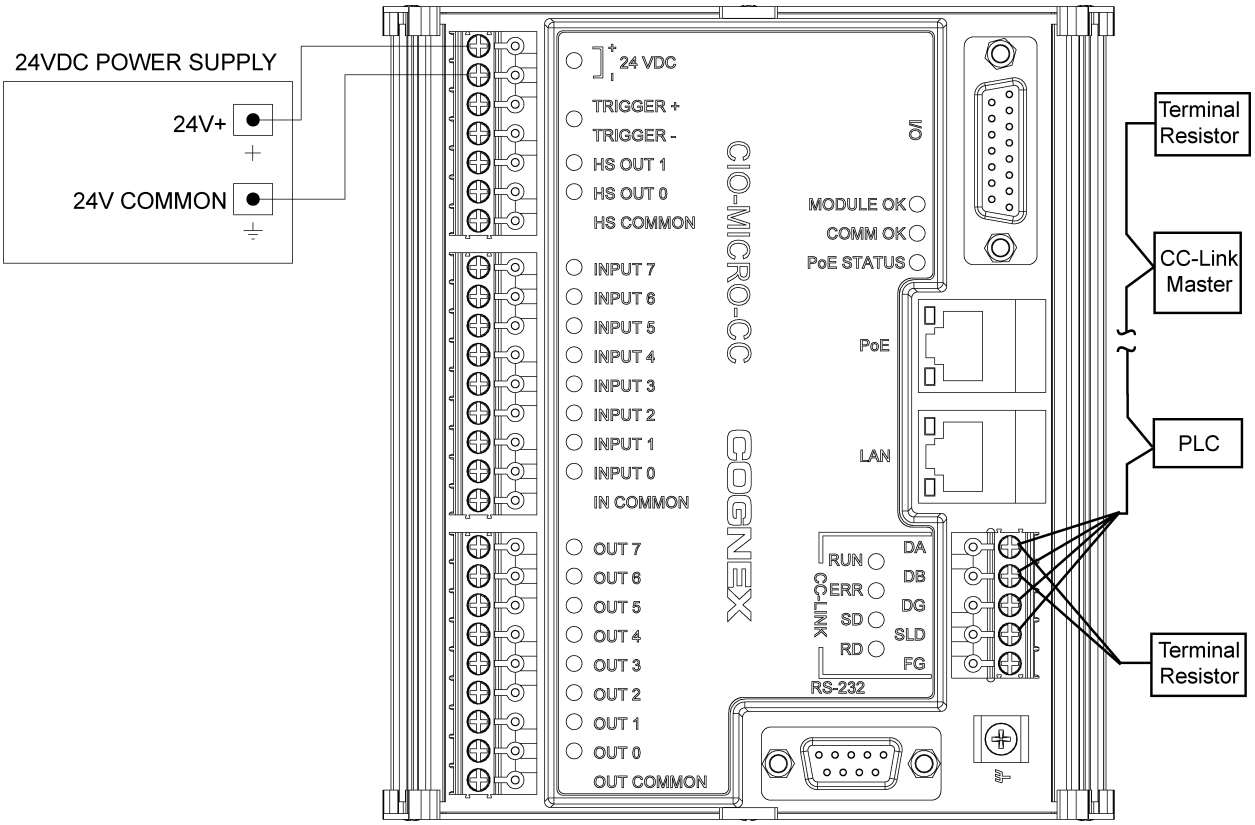

CC-Link Connection: Midspan Configuration

The CIO-MICRO-CC is connected to a CC-Link network.

Note:
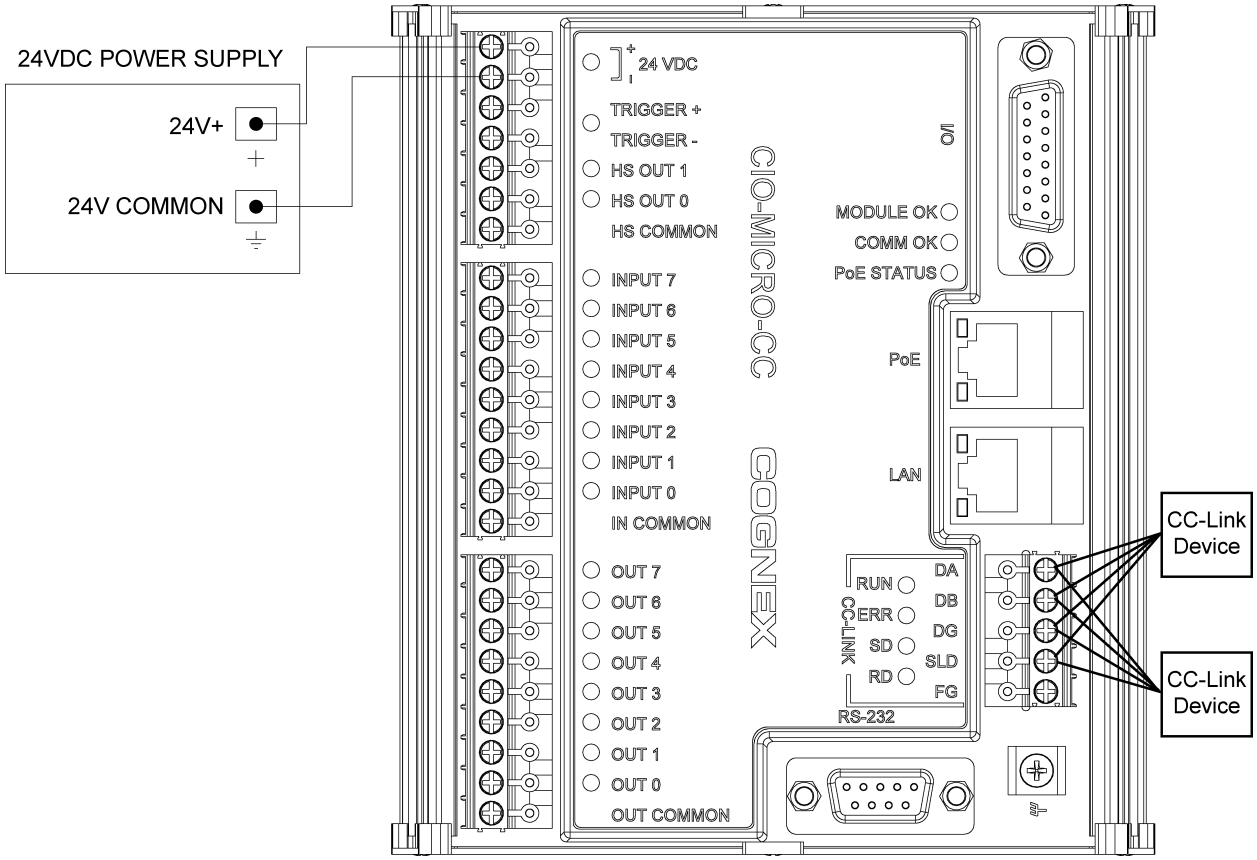
- To reduce emissions, attach a Steward 28A0640-0A2 ferrite around the CC-Link wire bundle as close to the connector as possible.
- The vision system must be Online for CC-link communications to function.